DP83907

DP83907 AT/LANTIC(TM)II

Literature Number: SNLS099A

National Semiconductor

PRELIMINARY
November 1995

DP83907 AT/LANTIC™II

General Description

The DP83907 Twisted-Pair Enhanced Coaxial Network Interface Controller is a CMOS VLSI device designed for easy implementation of CSMA/CD local area networks.

Unique to the DP83907 is the integration of the entire bus interface for PCAT ISA (Industry Standard Architecture) bus based systems. Hardware and software selectable options allow the DP83907's bus interface to be configured in the same manner as an NE2000 Architecture. All bus drivers and control logic are integrated to reduce board cost and area.

Supported network interfaces include 10BASE5 or 10BASE2 Ethernet via an external transceiver connected to its AUI port, and Twisted-pair Ethernet® (10BASE-T) using the on-board transceiver. The DP83907 provides the Ethernet Media Access Control (MAC), Encode-Decode (ENDEC) with an AUI interface, and 10BASE-T transceiver functions in accordance with the IEEE 802.3 standards.

The DP83907's integrated 10BASE-T transceiver fully complies with the IEEE standard. This functional block incorporates the receiver, transmitter, collision, heartbeat, loopback, jabber, and link integrity blocks as defined in the standard. The transceiver when combined with equalization resistors, transmit/receive filters, and pulse transformers provides a complete physical interface from the DP83907's ENDEC module and the twisted pair medium. (continued)

Features

- Controller and integrated bus interface solution for IEEE 802.3, 10BASE5, 10BASE2, and 10BASE-T
- Software compatible with industry standard Ethernet Adapters: Novell®'s NE2000
- No external bus logic or drivers needed
- Supports jumpered or jumperless configuration
- Provides EEPROM interface for non-volatile storage of configuration data, user-defined data and Ethernet Physical Address
- Allows in-situ programming of EEPROM
- Integrated controller, ENDEC, and transceiver
- Full IEEE 802.3 compliant AUI interface
- Single 5V supply

10BASE-T TRANSCEIVER MODULE:

- Integrates transceiver functionality
- Transmitter and receiver functions
- Collision detect, heartbeat and jabber
- Selectable link integrity test or link disable
- Polarity Detection/Correction
- Auto switch
- On chip filter

ENDEC MODULE:

- 10 Mbit/s Manchester encoding/decoding
- Squelch on receive and collision pairs

MAC/CONTROLLER MODULE:

- Software compatible with DP8390, DP83901, DP83902
- Efficient buffer management implementation

IN-CIRCUIT TEST

1.0 System Diagram

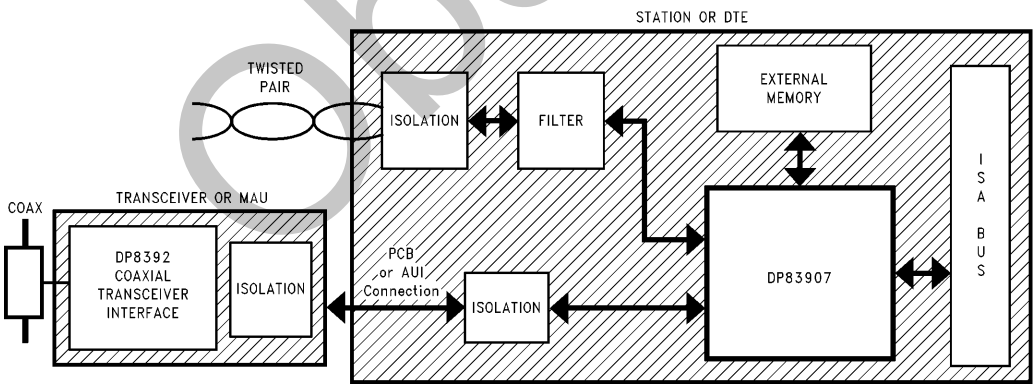

TL/F/12082–1

TRI-STATE® is a registered trademark of National Semiconductor Corporation.
AT/LANTIC™ is a trademark of National Semiconductor Corporation.
Ethernet® is a registered trademark of Xerox Corporation.
NetWare™ is a trademark of Novell Incorporated.
Novell® is a registered trademark of Novell Incorporated.

Obsolete

©1995 National Semiconductor Corporation TL/F/12082 RRD-B30M115/Printed in U. S. A.

General Description (Continued)

The integrated ENDEC module allows Manchester encoding and decoding via a differential transceiver and phase lock loop decoder at 10 Mbit/sec. Also included are a collision detect translator and diagnostic loopback capability. The ENDEC module interfaces directly to the transceiver module, and also provides a fully IEEE compliant AUI (Attachment Unit Interface) for connection to other media transceivers.

The Media Access Control function which is provided by the Network Interface Control module (NIC) provides simple and efficient packet transmission and reception control by means of off-board memory which can be accessed through an I/O port.

The DP83907 provides a comprehensive solution for 10BASE-T IEEE 802.3 networks. Due to the inherent constraints of CMOS processing, isolation is required at the AUI differential signal interface for 10BASE5 and 10BASE2 applications.

Table Of Contents

1.0 SYSTEM DIAGRAM

1.1 Connection Diagram

2.0 PIN DESCRIPTION

3.0 SIMPLIFIED APPLICATION DIAGRAM

4.0 FUNCTIONAL DESCRIPTION

4.1 Bus Interface Block

4.2 Power on RESET Operation

4.3 EEPROM Operation

4.4 Jumperless Operation Support

4.5 Ethernet Cable Configuration

4.6 Interrupt AND LED Operation

4.7 Boot PROM Operation

4.8 DP8390 Core (Network interface Controller)

4.9 Twisted Pair Interface Module

4.10 Encoder/Decoder (ENDEC) Module

5.0 REGISTER DESCRIPTIONS

5.1 Configuration Registers

5.2 NIC Core Registers

5.3 DP8390 Core DMA Registers

6.0 OPERATION OF DP83907

6.1 Transmit/Receive Packet Encapsulation/Decapsulation

6.2 Buffer Memory Access Control (DMA)

6.3 Packet Reception

6.4 Packet Transmission

6.5 Loopback Diagnostics

6.6 Memory Arbitration and Bus Operation

6.7 Functional Bus Timing

7.0 IN-CIRCUIT TEST (ICT) DESCRIPTION

Obsolete

Connection Diagram

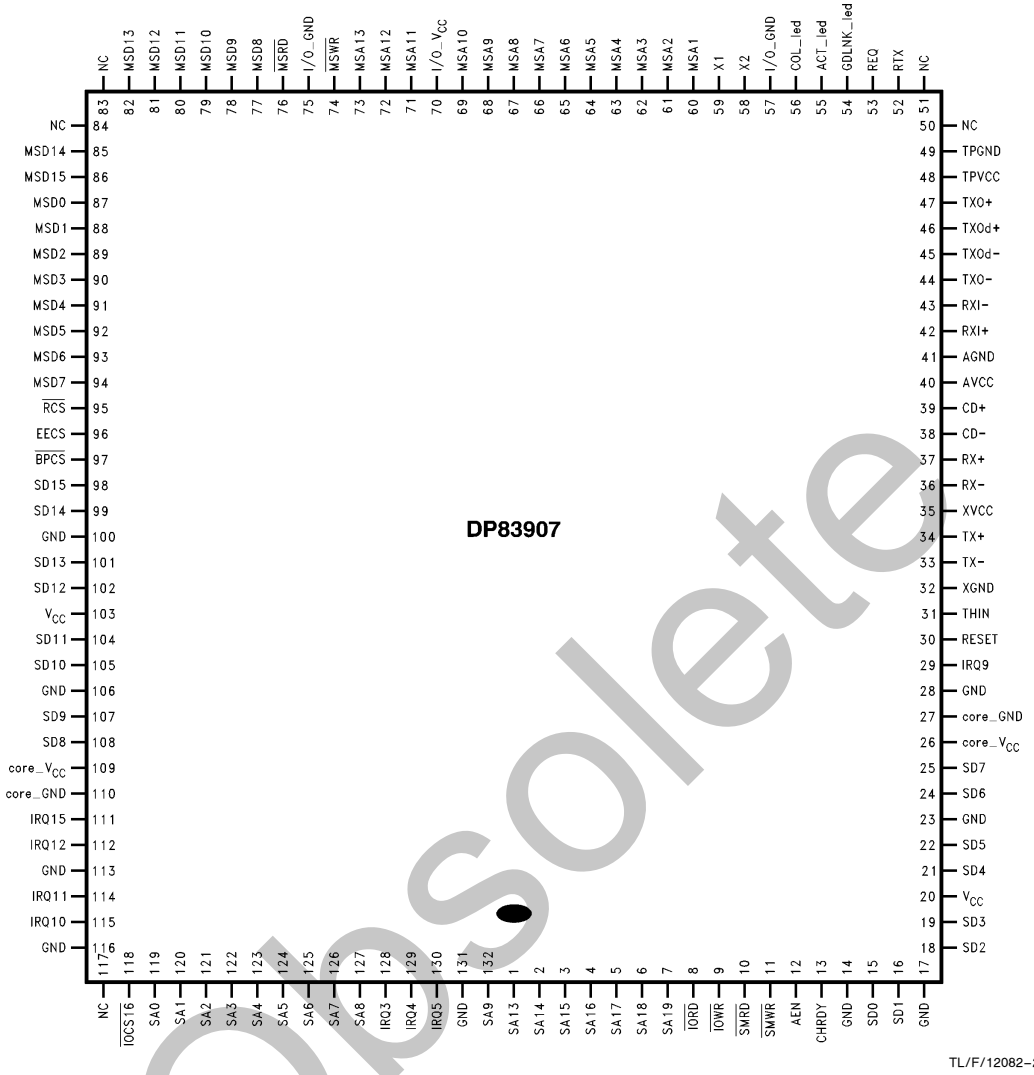

TL/F/12082–2

Order Number DP83907VF
See NS Package Number VF132A

Obsolete

2.0 Pin Description

Pin No.	Pin Name	Type	Description
ISA BUS INTERFACE PINS			
119–127, 132	SA0–SA9	I TTL	**LATCHED ADDRESS BUS:** Low-order 10 bits of the system's latched 20-bit address bus. These bits are used to decode accesses to the DP83907's I/O map.
1–7	SA13–SA19	I TTL	**LATCHED ADDRESS BUS:** 7 bits of the system's latched 20-bit address bus that are used to decode accesses to the DP83907's boot PROM.
10, 11	$\overline{\text{SMRD}}$, $\overline{\text{SMWR}}$	I TTL	**BOOT PROM STROBES:** These inputs are used to access the BOOT PROM.
15, 16, 18 19, 21, 22 24, 25, 98 99, 101, 102, 104, 105, 107, 108	SD0–SD7 SD8–SD15	I/O 3ST	**SYSTEM DATA BUS:** 16-bit system data bus. Used to transfer data between the system and the DP83907.
118	$\overline{\text{IOCS16}}$	O OCH	**16 BIT I/O TRANSFER:** This signal indicates that the DP83907 is responding to a 16-bit I/O access by driving 16 bits of data on the bus.
9	$\overline{\text{IOWR}}$	I TTL	**I/O WRITE STROBE:** Strobe from system to write to the DP83907's I/O map.
8	$\overline{\text{IORD}}$	I TTL	**I/O READ STROBE:** Strobe from system to read from the DP83907's I/O map.
30	RESET	I TTL	**RESET:** This signal is output by the system to reset all devices on the bus.
13	CHRDY	O OCH	**CHANNEL READY:** This signal is used to insert wait states into system accesses.
12	AEN	I TTL	**DMA ACTIVE:** This signal indicates that the systems DMA has control of the bus.
29, 111, 112, 114, 115, 128 129, 130	IRQ3, 4, 5, 9, 10, 11, 12, 15	O 3ST	**INTERRUPT REQUEST:** The operation of these outputs is determined by Configuration Register A.

Note: Driver Types are: I = Input, O = Output, I/O = Bi-directional Output, OCH = Open Collector, 3ST = TRI-STATE® Output, TTL = TTL Compatible, AUI = Attachment Unit Interface, TPI = Twisted Pair Interface, LED = LED Drive, MOS = CMOS Level Compatible, XTAL = Crystal.

Obsolete

2.0 Pin Description (Continued)

Pin No.	Pin Name	Type	Description
NETWORK INTERFACE PINS			
44–47	TxOd+, TXO−, TXO+ TXOd−	O TPI	**TWISTED PAIR TRANSMIT OUTPUTS:** These high drive CMOS level outputs are resistively combined external to the chip to produce a differential output signal with equalization to compensate for Intersymbol Interference (ISI) on the twisted pair medium.
42, 43	RXI+, RXI−	I TPI	**TWISTED PAIR RECEIVE INPUTS:** These inputs feed a differential amplifier which passes valid data to the ENDEC module.
33, 34	TX− TX+	O AUI	**AUI TRANSMIT OUTPUT:** Differential driver which sends the encoded data to the transceiver.
36, 37	RX− RX+	I AUI	**AUI RECEIVE INPUT:** Differential receive input pair from the transceiver.
38, 39	CD− CD+	I AUI	**AUI COLLISION INPUT:** Differential collision pair input from the transceiver.
55	$\overline{\text{ACT}}$__led	O LED	**ACTIVITY:** An open-drain active low output. It is asserted for approximately 50 ms whenever the DP83907 transmits or receives data in either AUI or TPI modes.
56	$\overline{\text{COL}}$__led	O LED	**COLLISION:** An open-drain active low output. It is asserted for approximately 50 ms whenever the DP83907 detects a collision in either either AUI or TPI modes.
54	$\overline{\text{GDLNK}}$__led	O LED	**GOOD LINK:** An open-drain active low output. This pin operates as an output to display link integrity status if this function has not been disabled by the GDLNK bit in Configuratioin Register B. This output is off if the DP83907 is in AUI mode or if link testing is enabled and the link integrity is bad (i.e., the twisted pair link has been broken). This output is on if the DP83907 is in Twisted Pair interface (TPI) mode, link integrity checking is enabled and the link integrity is good (i.e., the twisted pair link has **not** been broken) or if the link testing is disabled.
53	REQ	I	**EQUALIZATION RESISTOR:** A resistor can be connected from this pin to GND or V_{CC} to change the equalization of the TP output.
52	RTX	I	**TRANSMIT LEVEL RESISTOR:** A resistor can be connected from this pin to GND or V_{CC} to change the TP output amplitude level.
59	X1 (OSCIN)	I XTAL	**CRYSTAL ON EXTERNAL OSCILLATOR INPUT**
58	X2 (OSCOUT)	O XTAL	**CRYSTAL FEEDBACK OUTPUT:** Used in crystal connections only. Should be left unconnected when using an oscillator module.
31	THIN	O DCDC	**THIN CABLE:** This output is high if DP83907 is configured for thin cable. It can be used to enable the DC-DC converter required by the thin Ethernet configuration.

Note: Driver Types are: I = Input, O = Output, I/O = Bi-directional Output, OCH = Open Collector, 3ST = TRI-STATE Output, TTL = TTL Compatible, AUI = Attachment Unit Interface, TPI = Twisted Pair Interface, LED = LED Drive, MOS = CMOS Level Compatible, XTAL = Crystal.

Obsolete

2.0 Pin Description (Continued)

Pin No.	Pin Name	Type	Description
EXTERNAL MEMORY SUPPORT			
87–94	MSD0–7 or CA0–7 or DO, DI, SK	I/O–I–O MOS	**MEMORY SUPPORT DATA BUS—CONFIGURATION REGISTER A INPUT: EEPROM SIGNALS:** MSD0–7: When RESET is inactive these pins are used to access external memory and boot PROM. CA0–7: When RESET is active Configuration Register A is loaded with the data value on these pins. If the user puts an external pull-up on any of these pins then the corresponding register bit is set to a 1. If the pin is left unconnected then the register bit is 0. DO, DI, SK: When RESET goes from an active to an inactive level DP83907 will read the contents of a serial EEPROM, using these signals, and load the contents into internal registers. These internal registers are mapped into the space taken up by the PROM in the NE2000 Architecture. After the EEPROM read operation has completed these pins will revert to MSD0–2 (D0 = MSD0, DI = MSD1, SK = MSD2).
77–82 85, 86	MSD8–15 or CB0–7	I/O–I MOS	**MEMORY SUPPORT DATA BUS—CONFIGURATION REGISTER B INPUT:** MSD8–15: When RESET is inactive these pins are used to access external memory. CB0–7: When RESET is active Configuration Register B is loaded with the data value on these pins. If the user puts an external pull-up on any of these pins then the corresponding register bit is set to a 1. If the pin is left unconnected then the register bit is 0.
60–67	MSA1–8 or CC0–7	O–I MOS	**MEMORY SUPPORT ADDRESS BUS—CONFIGURATION REGISTER C INPUT:** MSA1–8: When RESET is inactive these pins drive the memory support address bus. CC0–7: When RESET is active Configuration Register C is loaded with the data value on these pins. If the user puts an external pull-up on any of these pins then the corresponding register bit is set to a 1. If the pin is left unconnected then the register bit is 0.
68, 69 71–73	MSA9–13 or DWID, EECONFIG and SIG 5–7	O–I MOS	**MEMORY SUPPORT ADDRESS BUS—DWID, EECONFIG AND SIGNATURE REGISTER:** MSA9–13: When RESET is inactive these pins drive the memory support address bus. DWID (MSA9): When RESET is active this input specifies whether the DP83907 is interfacing to an 8-bit or 16-bit ISA bus. If the user puts an external pull-up on this pin then the bus is considered to be 16-bit. If the pin is left unconnected then the bus is considered to be 8-bit. EECONFIG(MSA10): When RESET is active this input specifies whether the DP83907 loads the configuration from an EEPROM or from the MSD0–15 and MSA1–8 pins. If the user puts an external pull-up on this pin then configuration data is loaded from the EEPROM. If the pin is left unconnected then configuration data is loaded from the memory support bus. SIG 5–7(MSA11–13): When RESET is active the most significant 3 bits of the signature register are loaded with the data value on these pins. If the user puts an external pull-up on any of these pins then the corresponding register bit is set to a 1. If the pin is left unconnected then the register bit is 0.
76	$\overline{\text{MSRD}}$	O MOS	**MEMORY SUPPORT BUS READ:** Strobes data from the external RAM into the DP83907 via the memory support data bus.
74	$\overline{\text{MSWR}}$	O MOS	**MEMORY SUPPORT BUS WRITE:** Strobes data from the DP83907 into the external RAM via the memory support data bus.

Note: Driver Types are: I = Input, O = Output, I/O = Bi-directional Output, OCH = Open Collector, 3ST = TRI-STATE Output, TTL = TTL Compatible, AUI = Attachment Unit Interface, TPI = Twisted Pair Interface, LED = LED Drive, MOS = CMOS Level Compatible, XTAL = Crystal.

Obsolete

2.0 Pin Description (Continued)

Pin No.	Pin Name	Type	Description
EXTERNAL MEMORY SUPPORT (Continued)			
95	$\overline{RCS}$	O MOS	**RAM CHIP SELECT:** Drives the chip select of the external RAM.
97	$\overline{BPCS}$	O MOS	**BOOT PROM CHIP SELECT:** Selects the boot PROM on the memory support data bus. This is for READ only.
96	EECS	O MOS	**EEPROM CHIP SELECT:** Strobes data from the EEPROM onto the memory support data bus.
POWER SUPPLY PINS			
40	AV_{CC}		**ANALOG 5V SUPPLY PIN:** This pin supplies 5V to the DP83907's analog circuitry. To maximize data recovery it is recommended that analog layout and decoupling rules be applied between this pin and AGND.
41	AGND		**ANALOG NEGATIVE (GROUND) SUPPLY PIN.**
35, 48	XV_{CC}, TPV_{CC}		**PHYSICAL MEDIA 5V SUPPLY PINS:** This pin supplies 5V to the DP83907's analog physical media interface circuitry.
32, 49	XGND, TPGND		**PHYSICAL MEDIA NEGATIVE (GROUND) SUPPLY PINS:** This pin is the ground to the DP83907's analog physical media interface circuitry.
26, 109	$coreV_{CC}$		**POSITIVE 5V SUPPLY PINS:** These pins suppy power to the DP83907.
27, 110	coreGND		**NEGATIVE (GROUND) SUPPLY PINS:** These are the supply pins for the DP83907. It is suggested that decoupling capacitors be connected between the V_{CC} and GND pins. It is essential to provide a path to ground for the GND pins with the lowest possible impedance.
20, 70, 103	V_{CC}		**POSITIVE 5V SUPPLY PINS:** These pins supply power to the DP83907 Output Drivers e.g., SD, MSD, MSA, Chip selects.
14, 17, 23, 28, 57, 75, 100, 106,113, 116, 131	GND		**NEGATIVE (GROUND) SUPPLY PINS:** These are the supply pins for the DP83907 Drivers. It is suggested that decoupling capacitors be connected between the V_{CC} and GND pins. It is essential to provide a path to ground for the GND pins with the lowest possible impedance.

Note: Driver Types are: I = Input, O = Output, I/O = Bi-directional Output, OCH = Open Collector, 3ST = TRI-STATE Output, TTL = TTL Compatible, AUI = Attachment Unit Interface, TPI = Twisted Pair Interface, LED = LED Drive, MOS = CMOS Level Compatible, XTAL = Crystal.

Obsolete

3.0 Simplified Application Diagram

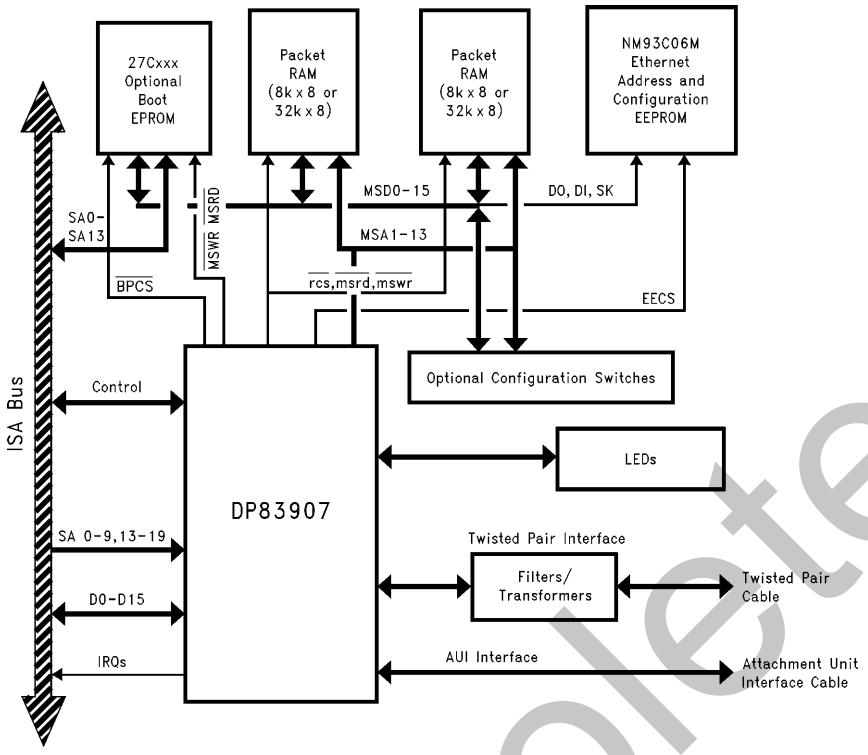

TL/F/12082–3

Obsolete

3.0 Simplified Application Diagram (Continued)

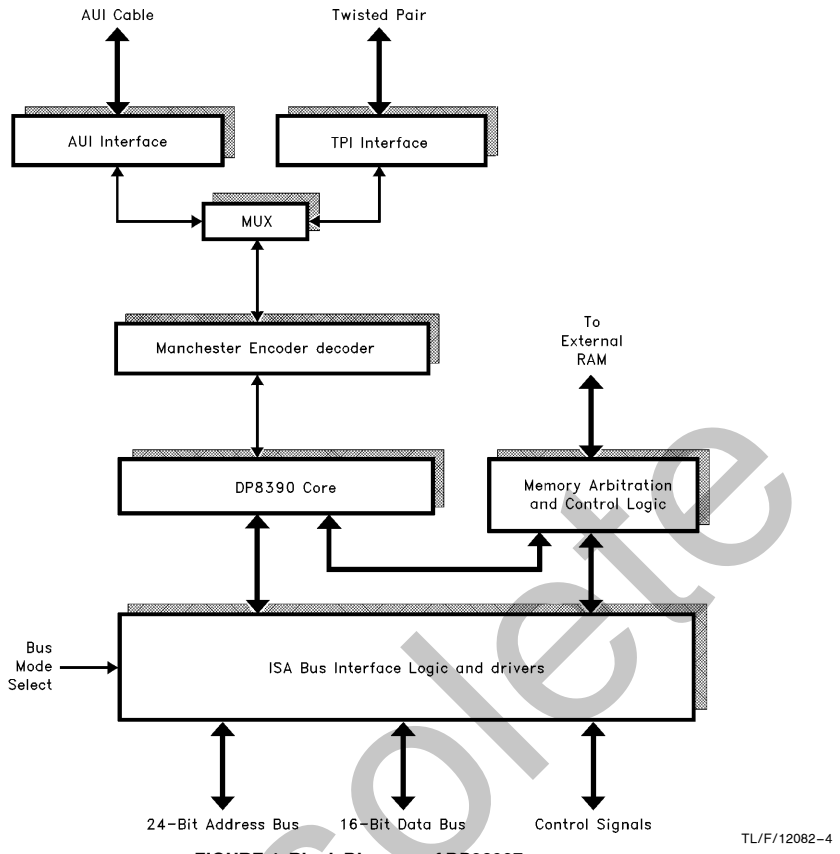

FIGURE 1. Block Diagram of DP83907

4.0 Functional Description

The DP83907 is a highly integrated and configurable Ethernet controller making it suitable for most Ethernet applications. The DP83907 integrates the functions of the following blocks:

1. ISA Bus Interface containing all logic required to connect the DP8390 core to a packet buffer RAM and the ISA bus.
2. DP8390 Ethernet Controller Core and Media Access Control logic.
3. Media Interface which includes a TPI transceiver.

4.1 BUS INTERFACE BLOCK

The DP83907's Bus interface block provides the circuitry to interface the Ethernet controller logic and the external packet buffer RAM to an ISA (Industry Standard Architecture) Bus. The bus interface provides an NE2000 Architecture compatible I/O port architecture, supporting both 8-bit and 16-bit wide ISA Bus slots.

DETERMINING 8-BIT OR 16-BIT WIDE DATA

DP83907 can treat the system data bus and all internal data busses as 8 bits or 16 bits wide. 8-bit or 16-bit mode is determined by MSA9 at reset. For an adapter card this pin can be used to automatically detect if the card has been plugged into an 8-bit or 16-bit slot by connecting MSA9 via a 10 kΩ pull-up resistor to a V_{DD} on the upper connector. It will be pulled high when plugged into a 16-bit slot, enabling 16-bit mode, and floating when plugged into an 8-bit slot. When floating the internal pull-down resistor will enable 8-bit mode.

Obsolete

4.0 Functional Description (Continued)

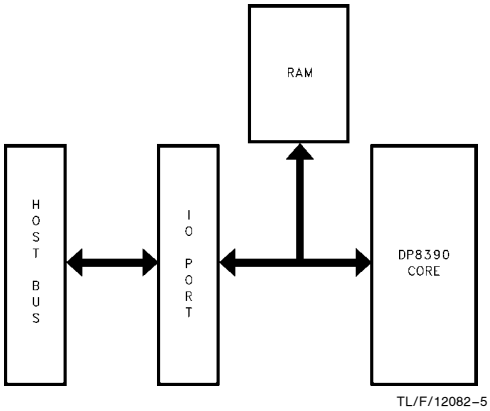

FIGURE 2. I/O Port

The DP83907's internal memory map is accessed one byte or word at a time, via a port within the systems I/O space. DP83907 is programmed by the user to control the transfers between its internal memory and the I/O port. The DP83907's internal registers and the memory access port are accessed within the system's I/O map. The address within this I/O map is, set by Configuration Register A.

16-BIT I/O PORT COMPATIBLE MODE I/O ADDRESS MAPPING

This mode is compatible with Novell's NE2000 Architecture. The base I/O address of DP83907 is configured by Configuration Register A (either upon power up or by software writing to this register). At the base I/O address the following stwcture appears.

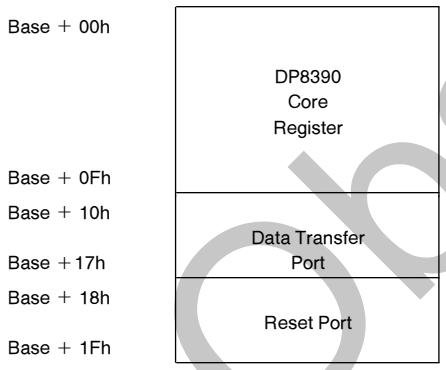

FIGURE 3. I/O Port Mode Register I/O Map

The DP83907 register space within this area are 8 bits wide, but the data transfer port is 16 bits wide. The DP83907's registers can be programmed to control the passing of data between its internal memory and the data transfer port. By accessing the data transfer port (using I/O instructions) the user can transfer data to or from the DP83907's internal memory. The DP83907's internal memory map is as shown below.

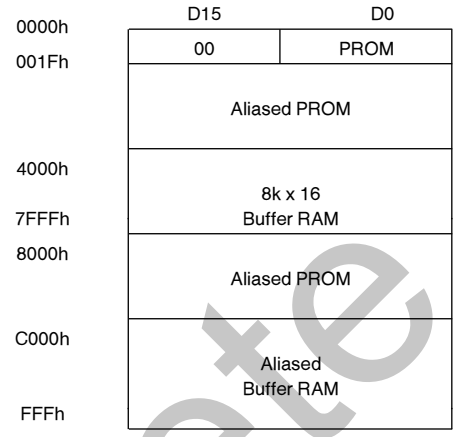

(a)

	D15	D0
001Eh	00	57h
001Ch	00	57h
	• 00 •	• RESERVED •
00Ah	00	E'net Address 5
0008h	00	E'net Address 4
0006h	00	E'net Address 3
0004h	00	E'net Address 2
0002h	00	E'net Address 1
0000h	00	E'net Address 0

(b)

FIGURE 4. a) NIC Core's 16-Bit Memory Map
b) 16-Bit PROM Map

DP83907 has a 64k address range but only does partial decoding through this space. The PROM data is mirrored from all decodes up to 4000H and the entire map is repeated at 8000H. To access either the PROM or the RAM the user must initiate a Remote DMA transfer between the I/O port and memory.

Obsolete

4.0 Functional Description (Continued)

On a remote read the DP83907 moves data from its internal memory map to the I/O port and the host system reads it by using an ''INW'' or ''INSW'' instruction from the I/O address of the data transfer port. If the system attempts to read the port before DP83907 has written the next word of data to it DP83907 will insert wait states into the system cycle using the CHRDY line. DP83907 will not begin the next memory read until the previous word of data has been read.

On a remote write the system writes data to the I/O port, using an ''OUTW'' or ''OUTSW'' instruction, and DP83907 moves it to its buffer memory. If the system attempts to write to the port before DP83907 has moved the data to memory, DP83907 will insert wait states into the system cycle using the CHRDY line. DP83907 will not begin the next memory write until a new word has been written to the I/O port.

Addresses 00H to 1FH are specified as the PROM space for compatibility with the NE2000 Architecture. This is actually an array of 8-bit registers which are loaded from an external EEPROM after DP83907 is initialized by an ISA RESET. They should contain the same data as the PROM did in the NE2000 Architecture and in the same format. To transfer the data out the user must initiate a 16-bit DMA read transfer and discard the most significant byte of data on each transfer.

At address 00H of the PROM is a six byte Ethernet address for this node. The upper two addresses of the PROM store contain bytes which identify whether the DP83907 is in 8-bit or 16-bit mode. For 16-bit mode these bytes both contain the value 57H, for 8-bit mode they both contain 42H.

8-BIT I/O PORT COMPATIBLE MODE

This mode is compatible with the 8-bit mode offered by Novells NE2000 Architecture. The NE2000 automatically detects whether it is in an 8-bit or 16-bit slot and configures itself appropriately. As explained in the previous paragraphs, the user can determine whether the board is in 8-bit or 16-bit mode by reading the PROM. In 8-bit mode only 8 Kbytes of RAM are addressable, as in the 8-bit mode of the NE2000 Architecture. The I/O map is the same as the 16-bit mode, the memory map is shown in *Figure 5*. Again the PROM has only a partial decode, so is mirrored at all addresses up to 4000H. The PROM still occupies 32 bytes of address space, although it only has 16 bytes of data, as the data at all odd address locations is merely a mirror of the data at the previous even address location.

A low cost card, using only one 8 Kbyte RAM, can be designed. If the function on MSA9 is left unconnected, then the DP83907 will always operate in 8-bit mode, regardless of the slot the board is in.

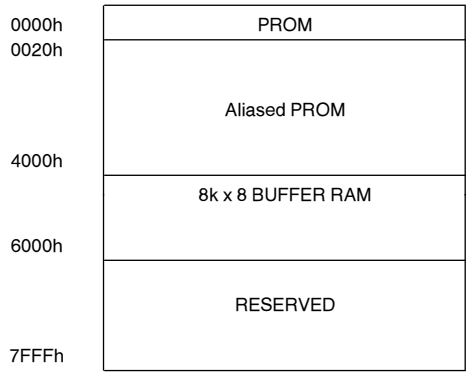

(a)

	D15	D0
1Eh	42h	42h
1Ch	42h	42h
	• RESERVED •	• RESERVED •
0Ah	E'net Address 5	E'net Address 5
08h	E'net Address 4	E'net Address 4
06h	E'net Address 3	E'net Address 3
04h	E'net Address 2	E'net Address 2
02h	E'net Address 1	E'net Address 1
00h	E'net Address 0	E'net Address 0

(b)

FIGURE 5. a) 8-Bit NIC Core's Memory Map
b) 8-Bit PROM Map

4.2 POWER ON RESET OPERATION

The DP83907 configures itself after a Reset signal is applied. To be recognized as a valid Power-On-Reset the Reset signal must be active for at least 415 μs. *Figure 6* shows how the RESET circuitry operates.

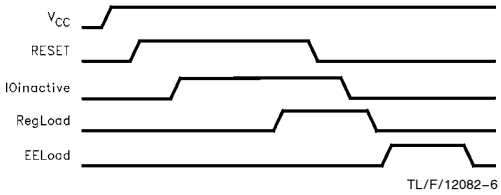

FIGURE 6. RESET Operation

Obsolete

4.0 Functional Description (Continued)

The ISA standard determines that within 500 ns of RESET going active all devices should enter the appropriate reset condition. The DP83907 will generate the internal signal IOinactive after RESET has been active for 400 ns, which will disable all outputs and cause RESET to be the only input monitored. The DP83907 will not respond to a RESET pulse of shorter duration than this. An internal timer continues to monitor the amount of time RESET is active. After 415 μs it is considered a valid Power-On-Reset and an internal signal called RegLoad is generated.

When a Power-On-Reset occurs the DP83907 latches in the values on the configuration pins and uses these to configure the internal registers and options. Internally these pins contain pull-down resistors, which are enabled when IOinactive goes active. If any pins are unconnected they default to a logic zero. The intemal pull-down resistor has a high resistance to allow the external pull-up resistors to be of a high value. This limits the current taken by the memory support bus. The suggested external resistor value is 10 kΩ. The configuration registers are loaded from the memory support bus when RESET goes inactive if RegLoad is active. The internal pull-down resistors are enabled onto the bus until RegLoad has gone inactive.

A Power-On-Reset also causes the DP83907 to load the internal PROM space from the EEPROM, which can take up to 320 μs. This occurs after RegLoad has gone inactive. The DP83907 will be inaccessible during this time. If EECONFIG is held high the configuration data loaded on the falling edge of RESET will be overwritten with data read from the serial EEPROM. Regardless of the level on EECONFIG, the PROM space will always be loaded with data from the serial EEPROM during the time specified as EELoad.

4.3 EEPROM OPERATION

The DP83907 uses an NMC93C06, or another serial EEPROM with compatible timings. The NMC93C06 is a 256-bit device, arranged as 16 words by 16 bits wide. The programmed contents of the EEPROM is shown in *Figure 7*.

	D15	D0
0Fh	EEPROM Code	Config. C
0Eh	Config. B	Config. A
	• • •	• • •
08h	42h	42h
07h	57h	57h
	• • •	• • •
03h	Reserved	Reserved
02h	E'net Address 5	E'net Address 4
01h	E'net Address 3	E'net Address 2
00h	E'net Address 1	E'net Address 0

FIGURE 7. EEPROM Programming Map

Mapping EEPROM into PROM Space

Data is read from the EEPROM at boot time and stored in registers within the DP83907. While this operation takes place the DP83907 can not be accessed by the system. These registers are mapped into the space traditionally occupied by the PROM in the NE2000

The user should program the EEPROM to contain the Ethernet address in the first six bytes and whatever is required in the next 8 bytes. The user should then program 5757H and 4242H into address 07h and 08h respectively. The DP83907 device driver may determine that this is a 16-bit board by checking this value.

The DP83907 reads the first 8 words from the EEPROM and maps them into the memory map at the appropriate address.

In Circuit ProgrammIng the EEPROM

If the upper byte of address 0Fh in the EEPROM does not contain 073H then the DP83907 enters a mode that allows the EEPROM contents to be programmed. This can be used in production to program the EEPROM in-situ. By programming 073H into the uppermost byte the EEPROM is protected from future adaptation, except for configuration data which can always be modified.

If the EEPR bit of the Signature Register is low the EEPROM program mode may be entered. The EEPR bit is low if the EEPROM code is not programmed as 73H. In this mode, if the EELOAD bit of Configuration Register B is set the user can directly control the EEPROM signals by writing to the Data Transfer Port. The user can write to the Data Transfer Port and the value on the SD3, SD2 and SD1 pins will be driven onto the EECS, SK and DI outputs. These outputs will be latched. The user can generate a clock on SK by repetitively writing 1 then 0 to the appropriate bit. This can be used to generate the EEPROM signals, as per the NM93C06 data sheet.

When the EEPROM has been programmed the user must give the DP83907 a reset signal to return to normal operation and to read in the new data.

Storing and Loading Configuration from EEPROM

If the EECONFIG function on MSA10 is high during boot up the DP83907's configuration is read from the EEPROM, before the PROM data is read. The configuration data is stored within the upper two words of the EEPROM's address space. Configuration Registers A and B are located in the lower of these words, Register C in the lower byte of the upper word, as shown in *Figure 7*.

To write this configuration into the EEPROM the user must follow the routine specified in the pseudo code below. If the EEPROM code byte in the EEPROM is programmed as 73H the Configuration Registers may be written to in the EPROM. This operation will work regardless of the level on EECONFIG. The EELOAD bit of Configuration Register B being set starts the EEPROM write process. Care should be taken not to accidentally set the GDLINK bit and therefore disable link integrity checking. The next 3 writes to this register load the values that will be stored in the configuration register (note that the last 2 of these writes do not have to follow the normal practice of preceding a write to this register with a read to this address). The DP83907 will then commence the EEPROM write. The write has been completed when the EELOAD bit goes to zero. This loading proce-

Obsolete

dure should be followed exactly and interrupts should be disabled until it has completed, to prevent any accidental accesses to the DP83907.

```
EEPROM_LOAD()
     {
          DISABLE_INTERRUPTS();
          value = READ(CONFIG_B);
          value = value AND ! GDLINK;
          value = value OR EELOAD;
          WRITE(CONFIG_B, value);
          READ(CONFIG_B);
          WRITE(CONFIG_B, config_for_A);
          WRITE(CONFIG_B, config_for_B);
          WRITE(CONFIG_B, config_for_C);
          while (value AND EELOAD)
               {
                    value = READ(CONFIG_B);
                    WAIT();
               }
          ENABLE_INTERRUPTS();
     }
```

4.4 JUMPERLESS OPERATION SUPPORT

One of the biggest problems in installing new adapters in a PC is not knowing the available resources within that machine. DP83907's software configuration overcomes that problem. The conflicts possible in the I/O base selection can be overcome by a special mode for software configuration of the I/O base address. By using this mode, and by using the configuration storage capability of the EEPROM, a fully software configurable design on the ISA bus can be realized without address conflict problems.

This mode is invoked by having the DP83907 default to jumperless software configuration option in the I/O base selection. This mode enables configuration register A to be mapped to address location 278H which is defined to be a printer port's data register. If software writes to this location four consecutive times, on the fourth write the DP83907 will load the data written into the I/O address bits of Configuration Register A. This data should set the I/O base address to a known conflict-free value. The DP83907 can now be configured and operated at the desired base I/O address. If desired, the configuration software could change the EEPROM content to the new values eliminating the need to reconfigure upon each power up. Alternately the software could leave the EEPROM alone and execute the configuration using the printer port's data register upon each power up. This configuration scheme will only work once after each power-up. Therefore the user can not enable the DP83907 from reserved mode, change it back into reserved mode and enable it again. A power-on reset must occur between the first time it is enabled from the reserved mode and the second.

4.5 ETHERNET CABLE CONFIGURATION

DP83907 offers the choice of all the possible Ethernet cabling options, that is Ethernet (10BASE5), Thin Ethernet (10BASE2) and Twisted-pair Ethernet (10BASE-T). The type of cabling used is controlled by Configuration Register B. DP83907 also supplies a THIN output signal which can be used to disable/enable an external DC-DC converter which is required for 10BASE2.

4.6 INTERRUPT AND LED OPERATION

The DP83907 has only one Interrupt Mode. There are 8 possible interrupts. Configuration Register A controls which of the 8 interrupt lines are driven, the others are TRI-STATE. **The interrupt outputs should be connected to the following ISA Interrupt lines, In the order given, to maintain NE2000 Architecture compatibility: 3, 4, 5, 9, 10, 11, 12, 15.**

4.7 BOOT PROM OPERATION

The DP83907 supports an optional boot PROM, the address and size of which can be set in Configuration Register C. This boot PROM can be any 8-bit wide storage device implemented with a non-volatile technology. Write cycles to this device can be enabled and disabled by programming Configuration Register B. This can be used to prevent unwanted write cycles to certain devices, such as a Flash EEPROM. The DP83907 supplies the chip select to the device and buffers the data on to and from the ISA bus, so the memory support data bus should be connected to the boot PROM's data pins.

4.8 DP8390 CORE (NETWORK INTERFACE CONTROLLER)

The DP8390 Core logic, *Figure 12*, contains the Serializer/Deserializer which is controlled by the Protocol PLA, DMA Control, FIFO, Address Comparator and Multicast Hashing Register. The DP8390 core implements all of the IEEE 802.3 Media access control functions for the DP83907 and interfaces to the internal ENDEC (on the left of the block diagram) and to the Bus Interface and memory support bus via a number of address, data and control signals (the right side of the block diagram). The following sections describe the functions of the DP8390 core.

Receive Deseriallzer

The Receive Deserializer is activated when the input signal Carrier Sense is asserted to allow incoming bits to be shifted into the shift register by the receive clock. The serial receive data is also routed to the CRC generator/checker. The Receive Deserializer includes a synch detector which detects the SFD (Start of Frame Delimiter) to establish where byte boundaries within the serial bit stream are located. After every eight receive clocks, the byte wide data is transferred to the 16-byte FIFO and the Receive Byte Count is incremented. The first six bytes after the SFD are checked for valid comparison by the Address Recognition Logic. If the Address Recognition Logic does not recognize the packet, the FIFO is cleared.

CRC Generator/Checker

During transmission, the CRC logic generates a local CRC field for the transmitted bit sequence. The CRC encodes all fields after the SFD. The CRC is shifted out MSB first follow-

Obsolete

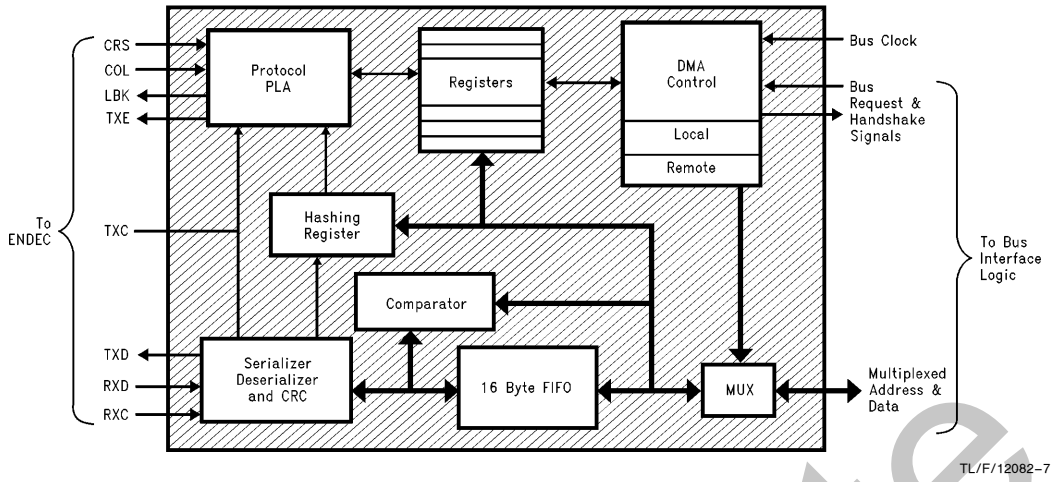

FIGURE 12. DP8390 Core Simplified Block Diagram

ing the last transmit byte. During reception the CRC logic generates a CRC field from the incoming packet. This local CRC is serially compared to the incoming CRC appended to the end of the packet by the transmitting node. If the local and received CRC match, a specific pattern will be generated and decoded to indicate no data errors. Transmission errors result in different pattern and are detected, resulting in rejection of a packet.

Transmit Serializer

The Transmit Serializer reads parallel data from the FIFO and serializes it for transmission. The serializer is clocked by the transmit clock generated internally. The serial data is also shifted into the CRC generator/checker. At the beginning of each transmission, the Preamble and SFD Generator append 62 bits of 1,0 preamble and a 1,1 synch pattern. After the last data byte of the packet has been serialized the 32-bit FCS (Frame Check Sequence) field is shifted directly out of the CRC generator. In the event of a collision the Preamble and SFD generator is used to generate a 32-bit JAM pattern of all 1's.

Comparator-Address Recognition Logic

The address recognition logic compares the Destination Address Field (first 6 bytes of the received packet) to the Physical address registers stored in the Address Register Array. If any one of the six bytes does not match the pre-programmed physical address, the Protocol Control Logic rejects the packet. All multicast destination addresses are filtered using a hashing technique. (See register description.) If the multicast address indexes a bit that has been set in the filter bit array of the Multicast Address Register Array the packet is accepted, otherwise it is rejected by the Protocol Control Logic. Each destination address is also checked for all 1's which is the reserved broadcast address.

FIFO and Packet Data Operations

OVERVIEW

To accommodate the different rates at which data comes from (or goes to) the network and goes to (or comes from) the packet buffer memory, the DP83907 contains a 16-byte FIFO for buffering data between the media and the buffer RAM located on the memory support bus. The FIFO threshold is programmable. When the FIFO has filled to its programmed threshold, the local DMA channel transfers these bytes (or words) into local memory (via the memory bus). It is crucial that the local DMA is given access to the bus within a minimum bus latency time; otherwise a FIFO underrun (or overrun) occurs.

Obsolete

4.0 Functional Description (Continued)

FIFO underruns or overruns are caused when a local DMA request is issued while an ISA bus access is current and the ISA cycle takes longer to complete than the local DMA's tolerable latency. This tolerable latency depends on the FIFO threshold, whether it is in byte or word wide mode and the speed of the DMA clock (BSCLK frequency). Note that this refers to standard ISA cycles, NOT those where the CHRDY is deasserted extending the cycle.

FIFO THRESHOLD DETECTION

To assure that no overwriting of data in the FIFO, the FIFO logic flags a FIFO overrun as the 13th byte is written into the FIFO, effectively shortening the FIFO to 13 bytes. The FIFO logic also operates differently in Byte Mode and in Word Mode. In Byte Mode, a threshold is indicated when the n + 1 byte has entered the FIFO; thus, with an 8 byte threshold, the DP83907 issues a request to the buffer RAM when the 9th byte has entered the FIFO, making the effective threshold 9 bytes. For Word Mode, the request is not generated until the n + 2 bytes have entered the FIFO. Thus, with a 4 word threshold (equivalent to 8 byte threshold), a request to the buffer RAM is issued when the 10th byte has entered the FIFO, making the effective threshold 10 bytes.

TOLERABLE LATENCY CALCULATION

To prevent a FIFO **overrun** a byte (or word) of data must be **removed** from the FIFO before the 13th byte is written. Therefore the worst case tolerable latency is the time from the effective threshold being reached to the time the 13th byte is written minus the time taken to load the first byte (or word) of data to the FIFO during a local DMA burst (8 BSCLKs).

$$\text{tolerable latency} = ((\text{overrun} - \text{effective})\ \text{threshold} \times \text{time to transfer byte on network}) - \text{time to fill 1st FIFO location}$$

For the case of a 4 word threshold using a 20 MHz BSCLK:

$$\text{tolerable latency} = ((13 - 10) \times 800) - (8 \times 50)\ \text{ns} = 2\ \mu\text{s}$$

To prevent a FIFO **underrun** a byte (or word) of data must be **added** to the FIFO before the last byte is removed. Therefore the worst case tolerable latency is the time from the effective threshold being reached to the time the last byte is removed minus the time taken to load the first byte (or word) of data to the FIFO during a local DMA burst (8 BSCLKs).

$$\text{tolerable latency} = (\text{threshold} \times \text{time to transfer byte on network}) - \text{time to fill 1st FIFO location}$$

For the case of a 4 word threshold using a 20 MHz BSCLK:

$$\text{tolerable latency} = (4 \times 800) - (8 \times 50)\ \text{ns} = 2.8\ \mu\text{s}$$

The worst case latency, either overrun or underrun, ultimately limits the overall latency that the DP83907 can tolerate. If the standard ISA cycles are shorter than the worst case latency, then no FIFO overruns or underruns will occur.

BEGINNING OF RECEIVE

At the beginning or reception, the DP83907 stores the entire Address field of each incoming packet in the FIFO to determine whether the packet matches its Physical Address Registers or maps to one of its Multicast Registers. This causes the FIFO to accumulate 8 bytes. Furthermore, there are some synchronization delays in the DMA PLA. Thus, the actual time that a request to access the buffer RAM is asserted from the time the Start of Frame Delimiter (SFD) is detected is 7.8 μs. This operation affects the bus latencies at 2 and 4 byte thresholds during the first receive request since the FIFO must be filled to 8 bytes (or 4 words) before issuing a request to the buffer RAM.

END OF RECEIVE

When the end of a packet is detected by the ENDEC module, the DP83907 enters its end of packet processing sequence, emptying its FIFO and writing the status information at the beginning of the 1st buffer. The DP83907 holds onto the memory bus for the entire sequence. The longest time that local DMA will hold the buffer RAM occurs when a packet ends just as the DP83907 performs its last FIFO burst. The DP83907, in this case, performs a programmed burst transfer followed by flushing the remaining bytes in the FIFO, and completed by writing the header information to the buffer memory. The following steps occur during this sequence.

1. DP83907 issues request to access the RAM because the FIFO threshold has been reached.
2. During the burst, the packet ends, resulting in the request being extended.
3. DP83907 flushes remaining bytes from FIFO.
4. DP83907 performs internal processing to prepare for writing the header.
5. DP83907 writes 4-byte (2-word) header
6. DP83907 de-asserts access to the buffer RAM.

BEGINNING OF TRANSMIT

Before transmitting, the DP83907 performs a prefetch from memory to load the FIFO. The number of bytes prefetched is the programmed FIFO threshold. The next request to the buffer RAM is not issued until after the DP83907 actually begins transmitting data, i.e., after SFD.

READING THE FIFO

If the FIFO is read during normal operation the DP83907 will ''hang'' the ISA bus by deasserting CHRDY and never asserting it. The FIFO should only be read during loopback diagnostics.

PROTOCOL PLA

The protocol PLA is responsible for implementing the IEEE 802.3 protocol, including collision recovery with random backoff. The Protocol PLA also formats packets during transmission and strips preamble and synch during reception.

DMA AND BUFFER CONTROL LOGIC

The DMA and Buffer Control Logic is used to control two 16-bit DMA channels. During reception, the Local DMA stores packets in a receive buffer ring, located in buffer memory. During transmission the Local DMA uses programmed pointer and length registers to transfer a packet from local buffer memory to the FIFO.

Obsolete

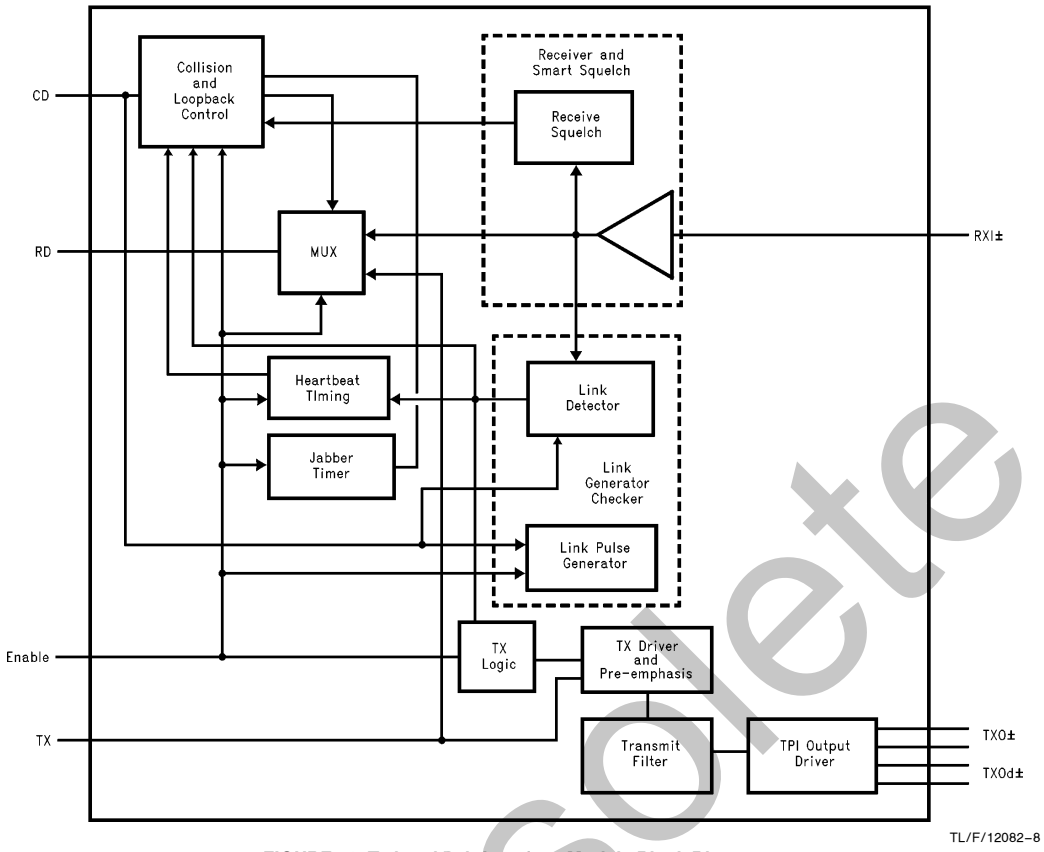

FIGURE 13. Twisted Pair Interface Module Block Diagram

A second DMA channel (Remote DMA) is used as a slave DMA to transfer data between the local buffer memory and the host system. The Local DMA and Remote DMA are internally arbitrated, with the Local DMA channel having highest priority. Both DMA channels use a common external bus clock to generate all required bus timing. External arbitration is performed with a standard bus request, bus acknowledge handshake protocol.

4.9 TWISTED PAIR INTERFACE MODULE

The TPI consists of five main logical functions:

a) The Receiver/Smart Squelch, responsible for determining when valid data is present on the differential receive inputs (RXI ±) and receiving the data.

b) The Collision function checks for simultaneous transmission and reception of data on the TXO ± and RXI ± pins.

c) The Link Detector/Generator checks the integrity of the cable connecting the two twisted pair MAUs.

d) The Jabber disables the transmitter if it attempts to transmit a longer than legal packet.

e) The TX Driver and Pre-emphasis transmits Manchester encoded data to the twisted pair network via the summing resistors and transformer/filter.

Obsolete

4.0 Functional Description (Continued)

Receiver and Smart Squelch

The DP83907 implements an intelligent receive squelch on the RXI± differential inputs to ensure that impulse noise on the receive inputs will not be mistaken for a valid signal.

The squelch circuitry employs a combination of amplitude and timing measurements to determine the validity of data on the twisted pair inputs. There are two voltage level options for the smart squelch. One mode, 10BASE-T mode, uses levels that meet the 10BASE-T specification. The second mode, reduced squelch mode, uses a lower squelch threshold level, and can be used in longer cable applications where due to attenuation smaller signal levels may be present. The squelch level mode can be selected in the DP83907 configuration registers.

Figure 14 shows the operation of the smart squelch in 10BASE-T mode.

The signal at the start of packet is checked by the smart squelch and any pulses not exceeding the squelch level (either positive or negative, depending upon polarity) will be rejected. Once this first squelch level is overcome correctly the opposite squelch level must then be exceeded within 150 ns later. Finally the signal must exceed the original squelch level within a further 150 ns to ensure that the input waveform will not be rejected. The checking procedure results in the loss of typically three bits at the beginning of each packet.

Only after all these conditions have been satisfied will a control signal be generated to indicate to the remainder of the circuitry that valid data is present. At this time the smart squelch circuitry is reset.

In the reduced squelch mode the operation is identical except that the lower squelch levels shown in the figure are used.

Valid data is considered to be present until either squelch level has not been generated for a time longer than 150 ns, indicating End of Packet. Once good data has been detected the squelch levels are reduced to minimize the effect of noise causing premature End of Packet detection.

Collision

A collision is detected by the TPI module when the receive and transmit channels are active simultaneously. If the TPI is receiving when a collision is detected it is reported to the controller immediately. If, however, the TPI is transmitting when a collision is detected the collision is not reported until seven bits have been received while in the collision state. This prevents a collision being reported incorrectly due to noise on the network. The signal to the controller remains for the duration of the collision.

Approximately 1 μsec after the transmission of each packet a signal called the Signal Quality Error (SQE) consisting of typically 10 cycles of 10 MHz is generated. This 10 MHz signal, also called the Heartbeat, ensures the continued functioning of the collision circuitry.

Link Detector/Generator

The link generator is a timer circuit that generates a link pulse as defined by the 10 Base-T specification that will be generated by the transmitter section. The pulse which is 100 ns wide is transmitted on the TXO+ output, every 16 ms, in the absence of transmit data.

The pulse is used to check the integrity of the connection to the remote MAU. The link detection circuit checks for valid pulses from the remote MAU and if valid link pulses are not received the link detector will disable the transmit, receive and collision detection functions.

The GDLNK output can directly drive a LED to show that there is a good twisted pair link. For normal conditions the LED will be on. The link integrity function can be disabled by setting the GDLNK bit of Configuration Register B.

Jabber

The jabber timer monitors the transmitter and disables the transmission if the transmitter is active for greater than 26 ms. The transmitter is then disabled for the whole time that the Endec module's internal transmit enable is asserted. This signal has to be deasserted for approximately 750 ms (the unjab time) before the Jabber re-enables the transmit outputs.

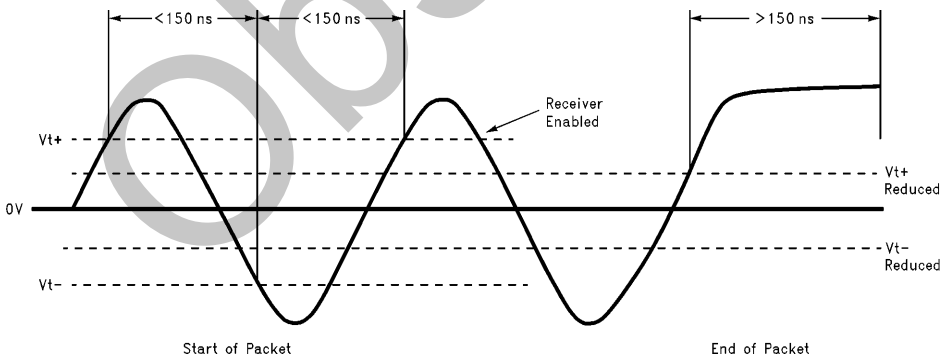

TL/F/12082–9

FIGURE 14. Twisted Pair Squelch Waveform

Obsolete

4.0 Functional Description (Continued)

Transmitter

The transmitter consists of four signals, the true and compliment Manchester encoded data (TXO±) and these signals delayed by 50 ns (TXOd±).

These four signals are resistively combined TXO+ with TXOd− and TXO− with TXOd+. This is known as digital pre-emphasis and is required to compensate for the twisted pair cable which acts like a low pass filter causing greater attenuation to the 10 MHz (50 ns) pulses of the Manchester encoded waveform than the 5 MHz (100 ns) pulses.

An example of how these signals are combined is shown in the following diagram.

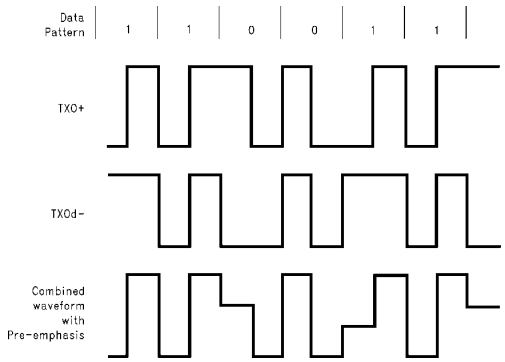

TL/F/12082–10

FIGURE 15. Typical Summed Transmit Waveform

The signal with pre-emphasis shown above is generated by resistively combining TXO+ and TXOd−. This signal along with its compliment is passed to the transmit filter.

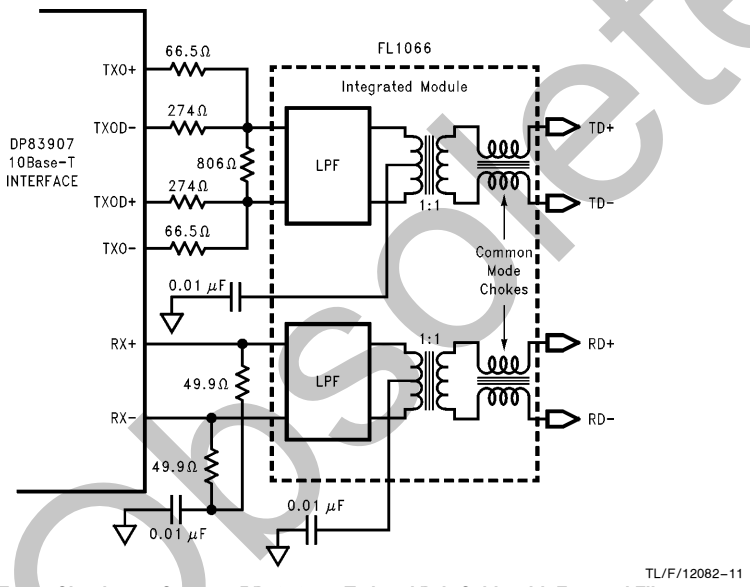

TL/F/12082–11

FIGURE 16a. Circuitry to Connect DP83907 to Twisted Pair Cable with External Filter

Obsolete

4.0 Functional Description (Continued)

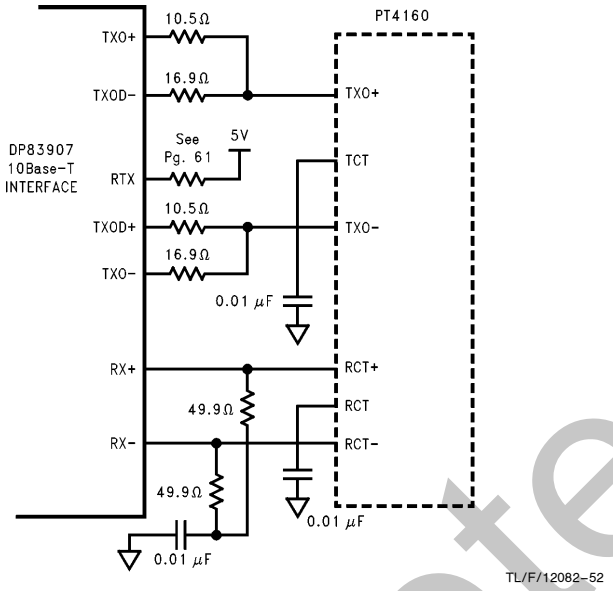

FIGURE 16b. Circuitry to Connect DP83907 to Twisted Pair Cable with Internal Filter

On-Chip Filters

The on-chip filters are enabled via an external pull-up resistors on MSD<12> at configuration. Only an isolation transformer and impedance matching resistors are needed for the transmit and receive twisted pair interface.

UTP/STP Function

The TPI transceiver supports both shielded and unshielded twisted pair cable. UTP is default but STP can be enabled during configuration by a pull-up on MSA<7> or by setting bit D6 of configuration register C. In UTP mode TXO+ and TXOD+ are driven and TXO− and TXOD− are TRI-STATED. In STP mode, TXO− and TXOD− are driven and TXO+ and TXOD+ are TRI-STATED.

Auto-Switch Function

When an auto-switch function is enabled at configuration by a pull-up on MSA<5> or by setting bit D4 of the configuration register C, it allows the transceiver to switch between TP and AUI outputs. If there is an absence of link pulses, the transceiver will switch to AUI mode. Similarly, when the transceiver starts detecting link pulses it will switch to TP mode. The switching from one mode to the next is only done after the current package has been transmitted or received. If the twisted pair output is jabbering and gets into link fail state, then the switch to AUI mode is only done after the jabbering is done, including the time it takes to unjab (unjab time). When auto-switching is enabled the THIN output is automatically generated if AUI is selected.

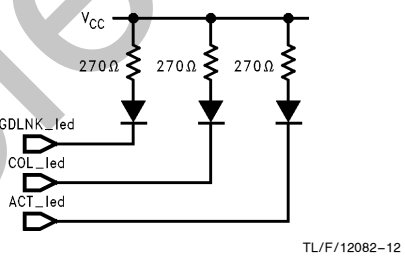

FIGURE 17. Typical DP83907 LED Connection

Status Information

Status information is provided by the DP83907 on the ACT__led, COL__led and GDLNK__led outputs as described in the pin description table. These outputs are suitable for driving status LED's as shown in *Figure 17*. All outputs are open drain.

Recommended Transformers for Internal Filter mode:

1) Valor PT4160
2) Pulse PE-68029
3) PCA EPE6087A
4) Delta THX16B02
5) Belfus A553-3899-06
6) Kappa TP3036

Obsolete

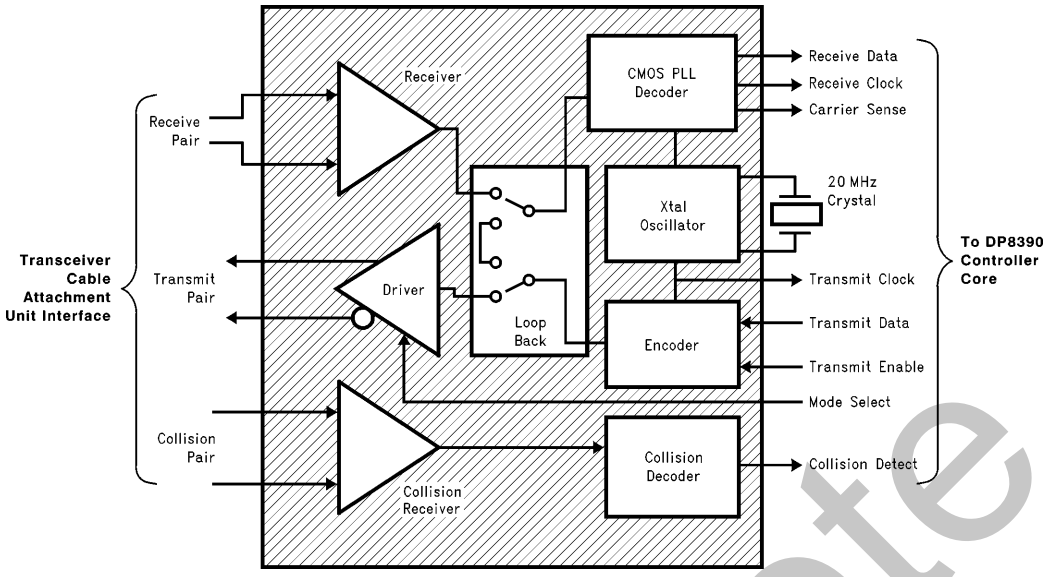

TL/F/12082–13

FIGURE 18. Encoder/Decode Block Diagram

4.10 ENCODER/DECODER (ENDEC) MODULE

The ENDEC consists of four main logical blocks:

a) The oscillator generates the 10 MHz transmit clock signal for system timing.

b) The Manchester encoder accepts NRZ data from the controller, encodes the data to Manchester, and transmits the data differentially to the transceiver, through the differential transmit driver.

c) The Manchester decoder receives Manchester data from the transceiver, converts it to NRZ data and clock pulses, and sends it to the controller.

d) The collision translator indicates to the controller the presence of a valid 10 MHz collision signal to the PLL.

Oscillator

The oscillator is controlled by a 20 MHz parallel resonant crystal connected between X1 and X2 or by an external clock on X1. The 20 MHz output of the oscillator is divided by 2 to generate the 10 MHz transmit clock for the controller. The oscillator also provides internal clock signals to the encoding and decoding circuits.

CRYSTAL OPERATION

If the crystal used with the internal oscillator circuit is not properly selected, the DP83907 oscillator may not reliably start oscillation under all conditions.

If this occurs, it could be deceiving to a designer, since his prototypes may work fine. However, when the designer does qualification testing or starts production, he may encounter a higher than expected board yield loss due to the oscillator not starting. The DP83907's oscillator circuit clocks the Encoder-Decoder logic. The DP83907's oscillator also clocks the twisted pair interface block. If the oscillator does not start, the DP83907 will not be able to transmit or receive.

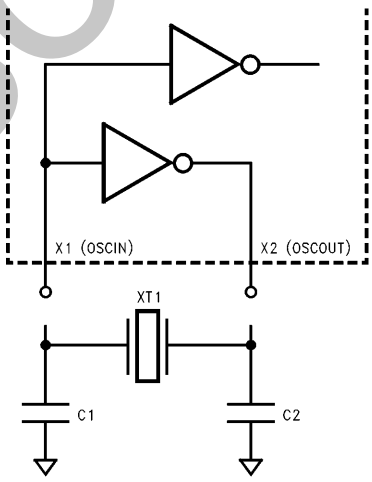

TL/F/12082–14

FIGURE 19. Crystal Connection to DP83907 (see text for component values)

Obsolete

4.0 Functional Description (Continued)

If a crystal is connected to the DP83907, it is recommended that the circuit shown in *Figure 19* be used and that the components used meet the following:

Crystal XT1: AT cut parallel resonant crystal

Series Resistance: ≤ 25Ω

Specified Load Capacitance: ≤ 20 pF

Accuracy: 0.005% (50 ppm)

Typical Load: 50 μW–75 μW

The recommended values for capacitors C1 and C2 should be 26 pF minus the board capacitance on that pin. Therefore if both X1 and X2 have 4 pF of board capacitance then a 22 pF capacitor should be used.

According to the IEEE 802.3 standard, the entire oscillator circuit (crystal and amplifier) must be accurate to 0.01%. When using a crystal, the X2 pin is not guaranteed to provide a TTL compatible logic output, and should not be used to drive external standard logic. If additional logic needs to be driven, then an external oscillator should be used, as described in the following section.

Oscillator Module Operation

If the designer wishes to use a crystal clock oscillator, one that provides the following should be employed:

1) TTL or CMOS output with a 0.01% frequency tolerance

2) 40–60% duty cycle

The circuit is shown in *Figure 20*. When using a clock oscillator it is recommended that the designer connect the oscillator output to the X1 pin and leave the X2 pin floating.

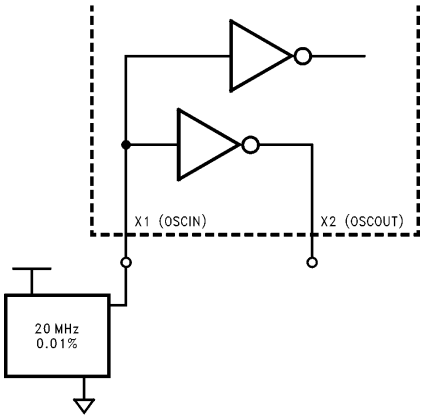

TL/F/12082–15

FIGURE 20. DP83907 Connection for Oscillator Module

Manchester Encoder and DIfferential Driver

The differential transmit pair, on the secondary of the employed transformer, drives up to 50 meters of twisted pair AUI cable.

The DP83907 allows full-step to be compatible with IEEE 802.3. Transmit+ and Transmit− are equal in the idle state, providing zero differential voltage to operate with transformer coupled loads.

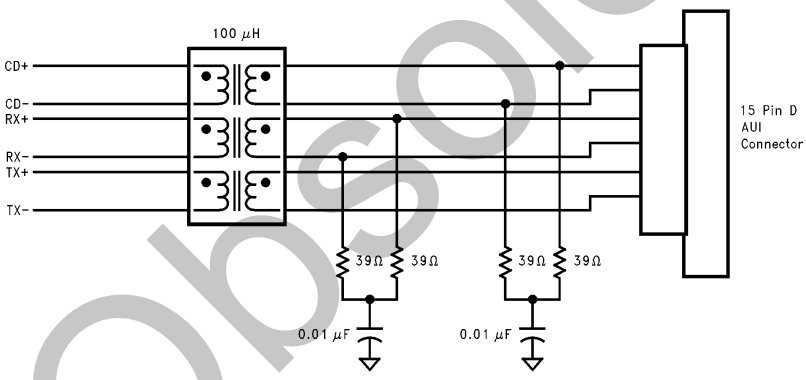

TL/F/12082–16

FIGURE 21. Connection from DP83907's AUI Port to a AUI Connector

Obsolete

4.0 Functional Description (Continued)

Manchester Decoder

The decoder consists of a differential receiver and a PLL to separate a Manchester encoded data stream into internal clock signals and data. The differential input must be externally terminated with two 39Ω resistors connected in series if the standard 78Ω transceiver drop cable is used. In thin Ethernet applications, these resistors are optional. To prevent noise from falsely triggering the decoder, a squelch circuit at the input rejects signals with levels less than −175 mV. Signals more negative than −300 mV. Data becomes valid typically within 6-bit times. The DP83907 may tolerate bit jitter up to 20 ns in the received data. The decoder detects the end of a frame when no more mid-bit transitions are detected.

Collision Translator

When in AUI Mode, the Ethernet transceiver (DP8392 CTI) detects a collision, it generates a 10 MHz signal to the differential collision inputs (CD±) of the DP83907. When these inputs are detected active, the DP83907 uses this signal to back off its current transmission and reschedule another one.

In this mode the COL__led output will indicate when the CD+ lines are active during activity on the network. This means it will correctly indicate any collision on the network, but will not be lit for heartbeat or if there is no cable connected.

The collision differential inputs are terminated the same way as the differential receive inputs. The squelch circuitry is also similar, rejecting pulses levels less than −175 mV.

AV_{CC} Power Supply Consideration

The AV_{CC} pin is the +5V power supply for the phase lock loop (PLL) of the ENDEC unit. Since this is an analog circuit, excessive noise on the AV_{CC} pin can affect the performance of the PLL. This noise, if in the 10 KHz–400 KHz range, can reduce the jitter performance of the ENDEC, resulting in missing packets or CRC errors.

If the power supply noise is causing significant packet reception error, a low pass filter could be added to reduce the power supply noise and hence improve the jitter performance. Standard analog design techniques should be utilized when laying out the power supply traces on the board. If the digital power supply is used, it may be desirable to add a one pole RC filter (designed to have a cut-off frequency of 1 KHz) as shown in *Figure 22* to improve the jitter performance. The AV_{CC} draws 3 mA–4 mA so the voltage across the resister is less than 90 mV, which will not affect the PLL's operation.

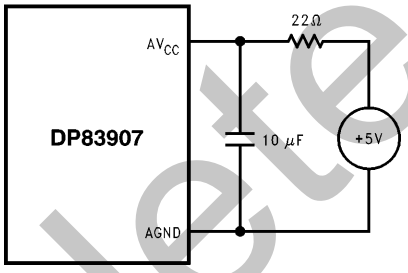

TL/F/12082–17

FIGURE 22. Filtering Power Supply Noise

Obsolete

5.0 Register Descriptions

5.1 CONFIGURATION REGISTERS

These registers are used to configure the operation of the DP83907 typically after power up. These registers control the configuration of bus interface, setting options like interrupt selection, I/O base address, and other specific modes.

MODE CONFIGURATION REGISTER A

To prevent any accidental writes of this register it is ''hidden'' behind a previously unused register. Register 0AH in the DP83907's Page 0 of registers was previously reserved on a read. Now Configuration Register A can be read at that address and can be written to by following a read to 0AH with a write to 0AH. If any other DP83907 register accesses take place between the read and the write then the write to 0AH will access the Remote Byte Count Register 0.

7	6	5	4	3	2	1	0
RES	FRd/Wr	INT2	INT1	INT0	IOAD2	IOAD1	IOAD0

Bit	Symbol	Function
0–2	IOAD0–IOAD2	**I/O ADDRESS:** These three bits determine the base I/O address of the DP83907 within the system's I/O map. The DP83907 occupies 20H bytes of the system's address space. Bit 2 1 0 0 0 0 0300H 0 0 1 Software (Note 1) 0 1 0 0240H 0 1 1 0280H 1 0 0 02C0H 1 0 1 0320H 1 1 0 0340H 1 1 1 0360H **Note 1:** When 001 is selected the DP83907 will not respond to any I/O Addresses, but will allow 4 consecutive writes to 278H to write these three bits of this register. This sequence will only operate once after a power-on reset. This mode allows the DP83907 to be configured via software without conflicting with other peripherals.
3–5	INT0–INT2	**INTERRUPT LINE USED:** Bit 5 4 3 IRQ 0 0 0 3 0 0 1 4 0 1 0 5 0 1 1 9 1 0 0 10 1 0 1 11 1 1 0 12 1 1 1 15
6	FRd/WR	**FAST RD/WR:** When this bit is set high the DP83907, in I/O mode, will begin the next port fetch before the current IORD/IOWR has completed. In slow ISA systems this may cause the data in the port to be overwritten before the ISA cycle has been completed.
7	RES	**RESERVED:** This bit must be set low for normal operation.

Obsolete

5.0 Register Descriptions (Continued)

MODE CONFIGURATION REGISTER B

To prevent any accidental writes of this register it is ''hidden'' behind a previously unused register. Register 0BH in the DP83907's Page 0 of registers was previously reserved on a read. Now Configuration Register B can be read at that address and can be written to by following a read to 0BH with a write to 0BH. If any other DP83907 register accesses take place between the read and the write then the write to 0BH will access the Remote Byte Count Register 1. **Care should be taken when writing to this register as GDLINK and BE are not simple read/write bits.** e.g., the user can not change the physical layer by reading B, or-ing the returned value with the bits to be set and writing this value to B. This could inadvertently disable link integrity generation and clear a bus error indication before it was noted.

7	6	5	4	3	2	1	0
EELOAD	BPWR	BE	RES	IO16CON	GDLINK	PHYS1	PHYS0

Bit	Symbol	Function
0–1	PHYS0–PHYS1	**PHYSICAL LAYER INTERFACE:** These 2 bits determine which type of physical interface the DP83907 is using. The 2 TPI interfaces use twisted pair outputs and inputs, while the other 2 interfaces use the AUI outputs and inputs. In 10BASE5 mode the THICK/$\overline{\text{THIN}}$ output pin is driven low, in 10BASE2 mode it is driven high. This can be used to enable the DC-DC converter required by the 10BASE2 specification to provide electrical isolation. The Non spec TPI mode is a twisted pair mode with reduced receive squelch levels. This allows the use of longer cable lengths than specified in the twisted pair specification, or the use of cable with higher losses. Bit 1 0 0 0 TPI (10BASE-T Compatible Squelch Level) 0 1 Thin Ethernet (10BASE2) 1 0 Thick Ethernet (10BASE5) (AUI Port) 1 1 TPI (Reduced Squelch Level)
2	GDLINK	**GOOD LINK:** When a 1 is written to this bit the link test pulse generation and integrity checking is disabled. When this bit is read it will indicate the link status, reflecting the value shown on the LED output. It is 0 if the DP83907 is in AUI mode or if link testing is enabled and the link integrity is bad (i.e., the twisted pair link has been broken). It is 1 if the DP83907 is in TPI mode, link integrity checking is enabled and the link integrity is good (i.e., the twisted pair link has **not** been broken) or if the link testing is disabled.
3	IO16CON	**$\overline{\text{IO16}}$ CONTROL:** When this bit is set high the DP83907 generates $\overline{\text{IO16}}$ after $\overline{\text{IORD}}$ or $\overline{\text{IOWR}}$ go active. If low this output is generated only on address decode.
4	RES	**RESERVED:** This bit must be set low for normal operation.
5	BE	**BUS ERROR:** This bit shows that the DP83907 has detected a bus error condition. This will go high if the DP83907 attempts to insert wait states into a system access and the system terminates the cycle without inserting the wait states. Writing a one to this bit clears it to zero. Writing a zero has no effect.
6	BPWR	**BOOT PROM WRITE:** When this bit is low no write cycles are generated to the boot PROM.
7	EELOAD	**EEPROM LOAD:** Writing a 1 to this bit enables the EEPROM load algorithm as detailed in Section 4. **This bit should not be configured to be high, either from switches or an EEPROM.**

Obsolete

5.0 Register Descriptions (Continued)

HARDWARE CONFIGURATION REGISTER C

This register is configured during a RESET and can be accessed by 3rd consecutive read config register A.

7	6	5	4	3	2	1	0
SOFEN	RES	RES	RES	BPS3	BPS2	BPS1	BPS0

Bit	Symbol	Function
0–3	BPS0–3	**BOOT PROM SELECT:** Selects address at which boot PROM begins and the size. When the system reads within the selected memory area DP83907 reads the data in through MSD0–7 and drives it onto the system data bus. The following are valid addresses and sizes:

Bit 3	Bit 2	Bit 1	Bit 0	Address	Size
0	0	0	X	X	No Boot PROM
0	0	1	0	0C000H	8K
0	0	1	1	0C400H	8K
0	1	0	0	0C800H	8K
0	1	0	1	0CC00H	8K
0	1	1	0	0D000H	8K
0	1	1	1	0D400H	8K
1	0	0	0	0D800H	8K
1	0	0	1	0DC00H	8K
1	0	1	0	0C000H	32K
1	0	1	1	0C800H	32K
1	1	0	0	0D000H	32K
1	1	0	1	0D800H	32K
1	1	1	0	0C000H	64K
1	1	1	1	0D000H	64K

Bit	Symbol	Function
4	RES	**RESERVED:** This bit must be set low for normal operation.
5	RES	**RESERVED:** This bit must be set high for normal operation.
6	RES	**RESERVED:** This bit must be set low for normal operation.
7	SOFEN	**SOFTWARE ENABLE:** If this bit is set low then the user can program configuration registers A and B in software. If this bit is set high then the configuration registers are not accessible. If EECONFIG is high the configuration from the switches will be overwritten by the configuration from the EEPROM even if this bit is pulled high.

Obsolete

5.0 Register Descriptions (Continued)

SIGNATURE REGISTER

This register is intended to allow the software programmer to determine which of the DP83907 family of devices and what board configuration is being used. This register is ''hidden'' behind a used register. Register 01H in the DP83907's Page 1 of registers is Physical Address Register 0, which is read/write. Now the Signature Register can be read at that address by following a read to 01H, on Page 1, with another read to 01H. If any other DP83907 register accesses take place between the two reads then the second read will access Physical Address Register 0. All writes are to Physical Address Register 0. The user can determine if the Signature Register exists by writing, while in Page 1, a known value to the Physical Address Register 0 then reading it back twice. The first read will be the known value. If the second read is not equal to the value written then the Signature Register exists. **This operation should only be attempted while the DP83907 is in STOP mode (STP bit in the Command Register set high)**.

7	6	5	4	3	2	1	0
SIG7	SIG6	SIG5	EEPR	REV3	REV2	REV1	REV0

Bit	Symbol	Function
0–3	REV0–3	**DP83907 FAMILY REVISION:** Shows that this is an DP83907 by holding the value: **Rev 3** **Rev 2** **Rev 1** **Rev 0** 1 0 0 0
4	EEPR	**EEPROM PROGRAMMED:** If the upper byte of the EEPROM contains 073H when loaded into the DP83907 this bit will be high.
0–3	SIG5–7 (MSA11–13)	**BOARD REVISION:** Shows that this board uses an NE2000 Architecture compatible interrupt structure: **Sig 7** **Sig 6** **Sig 5** 0 0 0

Obsolete

5.0 Register Descriptions (Continued)

5.2 NIC CORE REGISTERS

All registers are 8-bit wide and mapped into two pages which are selected in the Command Register (PS0, PS1). Pins RA0–RA3 are used to address registers within each page. Page 0 registers are those registers which are commonly accessed during DP83907 operation while page 1 registers are used primarily for initialization. The registers are partitioned to avoid having to perform two write/read cycles to access commonly used registers.

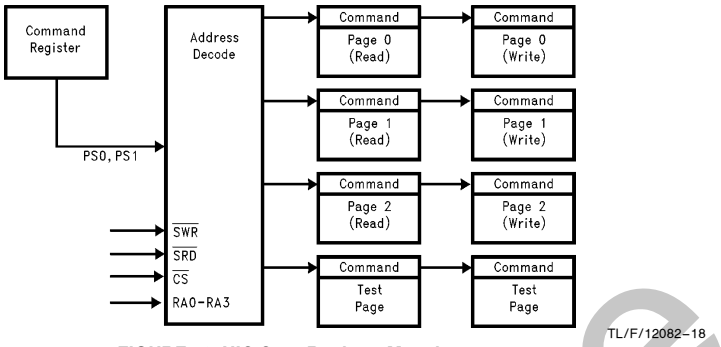

FIGURE 23. NIC Core Register Mapping

Register Assignments

Page 0 Address Assignments (PS1 = 0, PS0 = 0)

RA0–RA3	RD	WR
00H	Command (CR)	Command (CR)
01H	Current Local DMA Address 0 (CLDA0)	Page Start Register (PSTART)
02H	Current Local DMA Address 1 (CLDA1)	Page Stop Register (PSTOP)
03H	Boundary Pointer (BNRY)	Boundary Pointer (BNRY)
04H	Transmit Status Register (TSR)	Transmit Page Start Address (TPSR)
05H	Number of Collisions Register (NCR)	Transmit Byte Count Register 0 (TBCR0)
06H	FIFO (FIFO)	Transmit Byte Count Register 1 (TBCR1)
07H	Interrupt Status Register (ISR)	Interrupt Status Register (ISR)
08H	Current Remote DMA Address 0 (CRDA0)	Remote Start Address Register 0 (RSAR0)
09H	Current Remote DMA Address 1 (CRDA1)	Remote Start Address Register 1 (RSAR1)
0AH	Reserved	Remote Byte Count Register 0 (RBCR0)
0BH	Reserved	Remote Byte Count Register 1 (RBCR1)
0CH	Receive Status Register (RSR)	Receive Configuration Register (RCR)
0DH	Tally Counter 0 (Frame Alignment Errors) (CNTR0)	Transmit Configuration Register (TCR)
0EH	Tally Counter 1 (CRC Errors) (CNTR1)	Data Configuration Register (DCR)
0FH	Tally Counter 2 (Missed Packet Errors) (CNTR2)	Interrupt Mask Register (IMR)

Obsolete

5.0 Register Descriptions (Continued)

Page 1 Address Assignments (PS1 = 0, PS0 = 1)

RA0–RA3	RD	WR
00H	Command (CR)	Command (CR)
01H	Physical Address Register 0 (PAR0)	Physical Address Register 0 (PA R0)
02H	Physical Address Register 1 (PAR1)	Physical Address Register 1 (PA R1)
03H	Physical Address Register 2 (PAR2)	Physical Address Register 2 (PA R2)
04H	Physical Address Register 3 (PAR3)	Physical Address Register 3 (PA R3)
05H	Physical Address Register 4 (PAR4)	Physical Address Register 4 (PA R4)
06H	Physical Address Register 5 (PAR5)	Physical Address Register 5 (PA R5)
07H	Current Page Register (CURR)	Current Page Register (C URR)
08H	Multicast Address Register 0 (MAR0)	Multicast Address Register 0 (MAR0)
09H	Multicast Address Register 1 (MAR1)	Multicast Address Register 1 (MAR1)
0AH	Multicast Address Register 2 (MAR2)	Multicast Address Register 2 (MAR2)
0BH	Multicast Address Register 3 (MAR3)	Multicast Address Register 3 (MAR3)
0CH	Multicast Address Register 4 (MAR4)	Multicast Address Register 4 (MAR4)
0DH	Multicast Address Register 5 (MAR5)	Multicast Address Register 5 (MAR5)
0EH	Multicast Address Register 6 (MAR6)	Multicast Address Register 6 (MAR6)
0FH	Multicast Address Register 7 (MAR7)	Multicast Address Register 7 (MAR7)

Obsolete

5.0 Register Descriptions (Continued)

Page 2 Address Assignments (PS1 = 1, PS0 = 0)

RA0–RA3	RD	WR
00H	Command (CR)	Command (CR)
01H	Page Start Register (PSTART)	Current Local DMA Address 0 (CLDA0)
02H	Page Stop Register (PSTOP)	Current Local DMA Address 1 (CLDA1)
03H	Remote Next Packet Pointer	Remote Next Packet Pointer
04H	Transmit Page Start Address (TPSR)	Reserved
05H	Local Next Packet Pointer	Local Next Packet Pointer
06H	Address Counter (Upper)	Address Counter (Upper)
07H	Address Counter (Lower)	Address Counter (Lower)
08H	Reserved	Reserved
09H	Reserved	Reserved
0AH	Reserved	Reserved
0BH	Reserved	Reserved
0CH	Receive Configuration Register (RCR)	Reserved
0DH	Transmit Configuration Register (TCR)	Reserved
0EH	Data Configuration Register (DCR)	Reserved
0FH	Interrupt Mask Register (IMR)	Reserved

Note: Page 2 registers should only be accessed for diagnostic purposes. They should not be modified during normal operation.

Page 3 should never be modified.

Obsolete

5.0 Register Descriptions (Continued)

COMMAND REGISTER (CR) 00H (READ/WRITE)

The Command Register is used to initiate transmissions, enable or disable Remote DMA operations and to select register pages. To issue a command the microprocessor sets the corresponding bit(s) (RD2, RD1, RD0, TXP). Further commands may be overlapped, but with the following rules: (1) If a transmit command overlaps with a remote DMA operation, bits RD0, RD1, and RD2 must be maintained for the remote DMA command when setting the TXP bit. Note, if a remote DMA command is re-issued when giving the transmit command, the DMA will complete immediately if the remote byte count register has not been re-initialized. (2) If a remote DMA operation overlaps a transmission, RD0, RD1, and RD2 may be written with the desired values and a ''0'' written to the TXP bit. Writing a ''0'' to this bit has no effect. (3) A remote write DMA may not overlap remote read operation or vice versa. Either of these operations must either complete or be aborted before the other operation may start. Bits PS1, PS0, RD2, and STP may be set any time.

7	6	5	4	3	2	1	0
PS1	PS0	RD2	RD1	RD0	TXP	STA	STP

Bit	Symbol	Description
D0	STP	**STOP:** Software reset command, takes the controller off-line, no packets will be received or transmitted. Any reception or transmission in progress will continue to completion before entering the reset state. To exit this state, the STP bit must be reset and the STA bit must be set high. To perform a software reset, this bit should be set high. The software reset has executed only when indicated by the RST bit in the ISR being set to 1. STP powers up high. **Note:** If the DP83907 has previously been in start mode and the STP is set, both the STP and STA bits will remain set.
D1	STA	**START:** This bit is used to activate the NIC Core after either power up, or when the NIC Core has been placed in a reset mode by software command or error. STA powers up low.
D2	TXP	**TRANSMIT PACKET:** This bit must be set to initiate transmission of a packet. TXP is internally reset either after the transmission is completed or aborted. This bit should be set only after the Transmit Byte Count and Transmit Page Start registers have been programmed.
D3–D5	RD0–RD2	**REMOTE DMA COMMAND:** These three encoded bits control operation of the Remote DMA channel. RD2 can be set to abort any Remote DMA command in progress. The Remote Byte Count Registers should be cleared when a Remote DMA has been aborted. The Remote Start Addresses are not restored to the starting address if the Remote DMA is aborted. **RD2 RD1 RD0** 0 0 0 Not Allowed 0 0 1 Remote Read 0 1 0 Remote Write (Note 2) 0 1 1 Send Packet 1 X X Abort/Complete Remote DMA (Note 1) **Note 1:** If a remote DMA operation is aborted and the remote byte count has not decremented to zero, the data transfer port should be read, for a remote read or send packet, or written to, for a remote write. This is required to ensure future correct operation.
D6, D7	PS0, PS1	**PAGE SELECT:** These two encoded bits select which register page is to be accessed with addresses RA0–3. **PS1 PS0** 0 0 Register Page 0 0 1 Register Page 1 1 0 Register Page 2 1 1 Reserved

Obsolete

5.0 Register Descriptions (Continued)

INTERRUPT STATUS REGISTER (ISR) 07H (READ/WRITE)

This register is accessed by the host processor to determine the cause of an interrupt. Any interrupt can be masked in the Interrupt Mask Register (IMR). Individual interrupt bits are cleared by writing a ''1'' into the corresponding bit of the ISR. The valid interrupt output is active as long as any unmasked signal is set, and will not go low until all unmasked bits in this register have been cleared. The ISR must be cleared after power up by writing it with all 1's.

7	6	5	4	3	2	1	0
RST	RDC	CNT	OVW	TXE	RXE	PTX	PRX

Bit	Symbol	Description
D0	PRX	**PACKET RECEIVED:** Indicates packet received with no errors.
D1	PTX	**PACKET TRANSMITTED:** Indicates packet transmitted with no errors.
D2	RXE	**RECEIVE ERROR:** Indicates that a packet was received with one or more of the following errors: —CRC Error —Frame Alignment Error —FIFO Overrun —Missed Packet
D3	TXE	**TRANSMIT ERROR:** Set when packet transmitted with one or more of the following errors: —Excessive Collisions —FIFO Underrun
D4	OVW	**OVERWRITE WARNING:** Set when receive buffer ring storage resources have been exhausted. (Local DMA has reached Boundary Pointer.)
D5	CNT	**COUNTER OVERFLOW:** Set when MSB of one or more of the Network Tally Counters has been set.
D6	RDC	**REMOTE DMA COMPLETE:** Set when Remote DMA operation has been completed.
D7	RST	**RESET STATUS:** Set when DP83907 enters reset state and cleared when a Start Command is issued to the CR. This bit is also set when a Receive Buffer Ring overflow occurs and is cleared when one or more packets have been removed from the ring. Writing to this bit has no effect. **Note:** This bit does not generate an interrupt, it is merely a status indicator.

Obsolete

5.0 Register Descriptions (Continued)

INTERRUPT MASK REGISTER (IMR) 0FH (WRITE)

The Interrupt Mask Register is used to mask interrupts. Each interrupt mask bit corresponds to a bit in the Interrupt Status Register (ISR). If an interrupt mask bit is set, an interrupt will be issued whenever the corresponding bit in the ISR is set. If any bit in the IMR is set low, an interrupt will not occur when the bit in the ISR is set. **The IMR powers up all zeros.**

7	6	5	4	3	2	1	0
—	RDCE	CNTE	OVWE	TXEE	RXEE	PTXE	PRXE

Bit	Symbol	Description
D0	PRXE	**PACKET RECEIVED INTERRUPT ENABLE** 0: Interrupt Disabled 1: Enables Interrupt when packet received
D1	PTXE	**PACKET TRANSMITTED INTERRUPT ENABLE** 0: Interrupt Disabled 1: Enables Interrupt when packet is transmitted
D2	RXEE	**RECEIVE ERROR INTERRUPT ENABLE** 0: Interrupt Disabled 1: Enables Interrupt when packet received with error
D3	TXEE	**TRANSMIT ERROR INTERRUPT ENABLE** 0: Interrupt Disabled 1: Enables Interrupt when packet transmission results in error
D4	OVWE	**OVERWRITE WARNING INTERRUPT ENABLE** 0: Interrupt Disabled 1: Enables Interrupt when Buffer Management Logic lacks sufficient buffers to store incoming packet
D5	CNTE	**COUNTER OVERFLOW INTERRUPT ENABLE** 0: Interrupt Disabled 1: Enables Interrupt when MSB of one or more of the Network Statistics counters has been set
D6	RDCE	**DMA COMPLETE INTERRUPT ENABLE** 0: Interrupt Disabled 1: Enables Interrupt when Remote DMA transfer has been completed
D7	Reserved	Reserved

Obsolete

5.0 Register Descriptions (Continued)

DATA CONFIGURATION REGISTER (DCR) 0EH (WRITE)

This Register is used to program the DP83907 for 8- or 16-bit memory interface, select byte ordering in 16-bit applications and establish FIFO thresholds. **The DCR must be initialized prior to loading the Remote Byte Count Registers. LAS is set on power up.**

7	6	5	4	3	2	1	0
—	FT1	FT0	ARM	LS	LAS	BOS	WTS

Bit	Symbol	Description
D0	WTS	**WORD TRANSFER SELECT** 0: Selects byte-wide DMA transfers 1: Selects word-wide DMA transfers ; WTS establishes byte or word transfers for both Remote and Local DMA transfers **Note:** When word-wide mode is selected, up to 32k words are addressable; A0 remains low.
D1	BOS	**BYTE ORDER SELECT** 0: MS byte placed on AD15–AD8 and LS byte on AD7–AD0. (32xxx, 80x86) 1: MS byte placed on AD7–AD0 and LS byte on AD15–AD8. (680x0) : Ignored when WTS is low
D2	LAS	**LONG ADDRESS SELECT** 0: Dual 16-bit DMA mode 1: Single 32-bit DMA mode When LAS is high, the contents of the Remote DMA registers RSAR0, 1 are issued as A16–A31 Power up high
D3	LS	**LOOPBACK SELECT** 0: Loopback mode selected. Bits D1 and D2 of the TCR must also be programmed for Loopback operation 1: Normal Operation
D4	ARM	**AUTO-INITIALIZE REMOTE** 0: Send Command not executed, all packets removed from Buffer Ring under program control 1: Send Command executed, Remote DMA auto-initialized to remove packets from Buffer Ring **Note:** Send Command cannot be used with 680x0 byte processors.
D5 and D6	FT0 and FT1	**FIFO THRESHOLD SELECT:** Encoded FIFO threshold. Establishes point at which the memory bus is requested when filling or emptying the FIFO. During reception, the FIFO threshold indicates the number of bytes (or words) the FIFO has filled serially from the network before the FIFO is emptied onto the memory bus. **Note:** FIFO threshold setting determines the DMA burst length. **Receive Thresholds** **FT1 FT0 Word Wide Byte Wide** 0 0 1 Word 2 Bytes 0 1 2 Words 4 Bytes 1 0 4 Words 8 Bytes 1 1 6 Words 12 Bytes During transmission, the FIFO threshold indicates the number of bytes (or words) the FIFO has filled from the Local DMA before being transferred to the memory. Thus, the transmission threshold is 16 bytes less the received threshold.

Obsolete

5.0 Register Descriptions (Continued)

TRANSMIT CONFIGURATION REGISTER (TCR) ODH (WRITE)

The transmit configuration establishes the actions of the transmitter section of the DP83907 during transmission of a packet on the network. **LB1 and LB0 which select loopback mode power up as 0.**

7	6	5	4	3	2	1	0
—	—	—	OFST	ATD	LB1	LB0	CRC

Bit	Symbol	Description
D0	CRC	**INHIBIT CRC** 0: CRC appended by transmitter 1: CRC inhibited by transmitter In loopback mode CRC can be enabled or disabled to test the CRC logic.
D1 and D2	LB0 and LB1	**ENCODED LOOPBACK CONTROL:** These encoded configuration bits set the type of loopback that is to be performed. Note that loopback in mode 2 places the ENDEC Module in loopback mode and that D3 of the DCR must be set to zero for loopback operation. **LB1 LB0** Mode 0 0 0 Normal Operation (LPBK = 0) Mode 1 0 1 Internal NIC Module Loopback (LPBK = 0) Mode 2 1 0 Internal ENDEC Module Loopback (LPBK = 1) Mode 3 1 1 External Loopback (LPBK = 0)
D3	ATD	**AUTO TRANSMIT DISABLE:** This bit allows another station to disable the DP83907'S transmitter by transmission of a particular multicast packet. The transmitter can be re-enabled by resetting this bit or by reception of a second particular multicast packet. 0: Normal Operation 1: Reception of multicast address hashing to bit 62 disables transmitter, reception of multicast address hashing to bit 63 enables transmitter.
D4	OFST	**COLLISION OFFSET ENABLE:** This bit modifies the backoff algorithm to allow prioritization of nodes. 0: Backoff Logic implements normal algorithm. 1: Forces Backoff algorithm modification to 0 to $2^{\min(3+n,\,10)}$ slot times for first three collisions, then follows standard backoff. (For the first three collisions, the station has higher average backoff delay making a low priority mode.)
D5	Reserved	Reserved
D6	Reserved	Reserved
D7	Reserved	Reserved

Obsolete

5.0 Register Descriptions (Continued)

TRANSMIT STATUS REGISTER (TSR) 04H (READ)

This register records events that occur on the media during transmission of a packet. It is cleared when the next transmission is initiated by the host. All bits remain low unless the event that corresponds to a particular bit occurs during transmission. Each transmission should be followed by a read of this register. The contents of this register are not specified until after the first transmission.

7	6	5	4	3	2	1	0
OWC	CDH	FU	CRS	ABT	COL	—	PTX

Bit	Symbol	Description
D0	PTX	**PACKET TRANSMITTED:** Indicates transmission without error. (No excessive collisions or FIFO underrun) (ABT = ''0'', FU = ''0'').
D1	Reserved	Reserved
D2	COL	**TRANSMIT COLLIDED:** Indicates that the transmission collided at least once with another station on the network. The number of collisions is recorded in the Number of Collisions Registers (NCR).
D3	ABT	**TRANSMIT ABORTED:** Indicates the DP83907 aborted transmission because of excessive collisions. (Total number of transmissions including original transmission attempt equals 16.)
D4	CRS	**CARRIER SENSE LOST:** This bit is set when carrier is lost during transmission of the packet. Transmission is not aborted on loss of carrier.
D5	FU	**FIFO UNDERRUN:** If the DP83907 cannot gain access of the bus before the FIFO empties, this bit is set. Transmission of the packet will be aborted.
D6	CDH	**CD HEARTBEAT:** Failure of the transceiver to transmit a collision signal after transmission of a packet will set this bit. The Collision Detect (CD) heartbeat signal must commence during the first 6.4 μs of the Interframe Gap following a transmission. In certain collisions, the CD Heartbeat bit will be set even though the transceiver is not performing the CD heartbeat test.
D7	OWC	**OUT OF WINDOW COLLISION:** Indicates that a collision occurred after a slot time (51.2 μs). Transmissions rescheduled as in normal collisions.

Obsolete

5.0 Register Descriptions (Continued)

RECEIVE CONFIGURATION REGISTER (RCR) 0CH (WRITE)

This register determines operation of the DP83907 during reception of a packet and is used to program what types of packets to accept.

7	6	5	4	3	2	1	0
—	—	MON	PRO	AM	AB	AR	SEP

Bits	Symbols	Description
D0	SEP	**SAVE ERRORED PACKETS** 0: Packets with receive errors are rejected. 1: Packets with receive errors are accepted. Receive errors are CRC and Frame Alignment errors.
D1	AR	**ACCEPT RUNT PACKETS:** This bit allows the receiver to accept packets that are smaller than 64 bytes. The packet must be at least 8 bytes long to be accepted as a runt. 0: Packets with fewer than 64 bytes rejected. 1: Packets with fewer than 64 bytes accepted.
D2	AB	**ACCEPT BROADCAST:** Enables the receiver to accept a packet with an all 1's destination address. 0: Packets with broadcast destination address rejected. 1: Packets with broadcast destination address accepted.
D3	AM	**ACCEPT MULTICAST:** Enables the receiver to accept a packet with a multicast address, all multicast addresses must pass the hashing array. 0: Packets with multicast destination address not checked. 1: Packets with multicast destination address checked.
D4	PRO	**PROMISCUOUS PHYSICAL:** Enables the receiver to accept all packets with a physical address. 0: Physical address of node must match the station address programmed in PAR0–PAR5. 1: All packets with physical addresses accepted.
D5	Reserved	Reserved (program to 0)
D6	Reserved	Reserved
D7	Reserved	Reserved

Note: D2 and D3 are ''OR'd'' together, i.e., if D2 and D3 are set the DP83907 will accept broadcast and multicast addresses as well as its own physlcal address. To establish full promiscuous mode, bits D2, D3, and D4 should be set. In addition the multicast hashing array must be set to all 1's in order to accept all multicast addresses.

Obsolete

5.0 Register Descriptions (Continued)

RECEIVE STATUS REGISTER (RSR) 0CH (READ)

This register records status of the received packet, including information on errors and the type of address match, either physical or multicast. The contents of this register are written to buffer memory by the DMA after reception of a good packet. If packets with errors are to be saved the receive status is written to memory at the head of the erroneous packet if an erroneous packet is received. If packets with errors are to be rejected the RSR will not be written to memory. The contents will be cleared when the next packet arrives. CRC errors, Frame Alignment errors and missed packets are counted internally by the DP83907 which relinquishes the Host from reading the RSR in real time to record errors for Network Management Functions. The contents of this register are not specified until after the first reception.

7	6	5	4	3	2	1	0
DFR	DIS	PHY	MPA	FO	FAE	CRC	PRX

Bit	Symbol	Description
D0	PRX	**PACKET RECEIVED INTACT:** Indicates packet received without error. (Bits CRC, FAE, FO, and MPA are zero for the received packet.)
D1	CRC	**CRC ERROR:** Indicates packet received with CRC error. Increments Tally Counter (CNTR1). This bit will also be set for Frame Alignment errors.
D2	FAE	**FRAME ALIGNMENT ERROR:** Indicates that the incoming packet did not end on a byte boundary and the CRC did not match at last byte boundary. Increments Tally Counter (CNTR0).
D3	FO	**FIFO OVERRUN:** This bit is set when the FIFO is not serviced causing overflow during reception. Reception of the packet will be aborted.
D4	MPA	**MISSED PACKET:** Set when packet intended for node cannot be accepted by SNIC because of a lack of receive buffers or if the controller is in monitor mode and did not buffer the packet to memory. Increments Tally Counter (CNTR2).
D5	PHY	**PHYSICAL/MULTICAST ADDRESS:** Indicates whether received packet had a physical or multicast address type. 0: Physical Address Match 1: Multicast/Broadcast Address Match
D6	DIS	**RECEIVER DISABLED:** Set when receiver disabled by entering Monitor mode. Reset when receiver is re-enabled when exiting Monitor mode.
D7	DFR	**DEFERRING:** Set when internal Carrier Sense or Collision signals are generated in the ENDEC module. If the transceiver has asserted the CD line as a result of the jabber, this bit will stay set indicating the jabber condition.

Note: Following coding applies to CRC and FAE bits:

FAE	CRC	Type of Error
0	0	No Error (Good CRC and <6 Dribble Bits)
0	1	CRC Error
1	0	Illegal, wil not occur
1	1	Frame Alignment Error and CRC Error

Obsolete

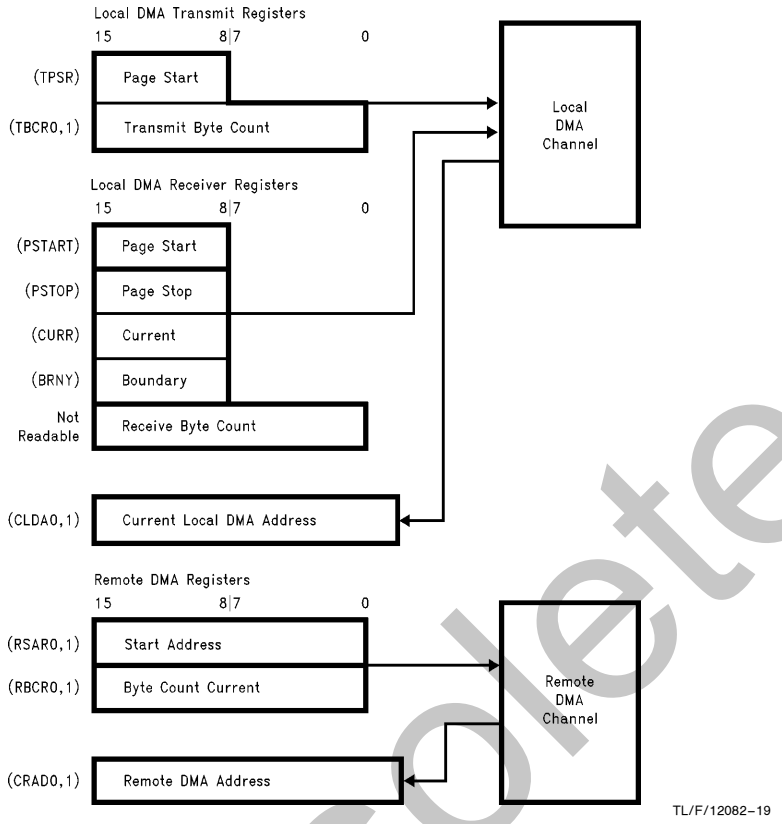

FIGURE 24. DMA Registers

Obsolete

5.3 DP8390 CORE DMA REGISTERS

The DMA Registers are partitioned into groups; Transmit, Receive and Remote DMA Registers. The Transmit registers are used to initialize the Local DMA Channel for transmission of packets while the Receive Registers are used to initialize the Local DMA Channel for packet Reception. The Page Stop, Page Start, Current and Boundary Registers are used by the Buffer Management Logic to supervise the Receive Buffer Ring. The Remote DMA Registers are used to initialize the Remote DMA

Note: In the figure above, registers are shown as 8 or 16 bits wide. Although some registers are 16-bit internal registers, all registers are accessed as 8-bit registers. Thus the 16-bit Transmit Byte Count Register is broken into two 8-bit registers. TBCR0 TBCR1. Also TPSR, PSTART, PST0P, CURR and BNRY only check or control the upper 8 bits of address information on the bus. Thus they are shifted to positions 15-8 in the diagram above.

Transmit DMA Registers

TRANSMIT PAGE START REGISTER (TPSR)

This register points to the assembled packet to be transmitted. Only the eight higher order addresses are specified since all transmit packets are assembled on 256-byte page boundaries. The bit assignment is shown below. The values placed in bits D7-D0 will be used to initialize the higher order address (A8-A15) of the Local DMA for transmission. The lower order bits (A7–A0) are initialized to zero.

Bit Assignment

	7	6	5	4	3	2	1	0
TPSR	A15	A14	A13	A12	A11	A10	A9	A8

(A7–A0 Initialized to 0)

TRANSMIT BYTE COUNT REGISTER 0,1 (TBCR0, TBCR1)

These two registers indicate the length of the packet to be transmitted in bytes. The count must include the number of bytes in the source, destination, length and data fields. The maximum number of transmit bytes allowed is 64K bytes. The DP83907 will not truncate transmissions longer than 1500 bytes. The bit assignment is shown below:

	7	6	5	4	3	2	1	0
TBCR1	L15	L14	L13	L12	L11	L10	L9	L8
	7	6	5	4	3	2	1	0
TBCR0	L7	L6	L5	L4	L3	L2	L1	L0

5.0 Register Descriptions (Continued)

Local DMA Receive Registers

PAGE START STOP REGISTERS (PSTART, PSTOP)

The Page Start and Page Stop Registers program the starting and stopping address of the Receive Buffer Ring. Since the DP83907 uses fixed 256-byte buffers aligned on page boundaries only the upper eight bits of the start and stop address are specified.

PSTART, PSTOP bit assignment

	7	6	5	4	3	2	1	0
PSTART PSTOP	A15	A14	A13	A12	A11	A10	A9	A8

BOUNDARY (BNRY) REGISTER

This register is used to prevent overflow of the Receive Buffer Ring. Buffer management compares the contents of this register to the next buffer address when linking buffers together. If the contents of this register match the next buffer address the Local DMA operation is aborted.

	7	6	5	4	3	2	1	0
BNRY	A15	A14	A13	A12	A11	A10	A9	A8

CURRENT PAGE REGISTER (CURR)

This register is used internally by the Buffer Management Logic as a backup register for reception. CURR contains the address of the first buffer to be used for a packet reception and is used to restore DMA pointers in the event of receive errors. This register is initialized to the same value as PSTART and should not be written to again unless the controller is Reset.

	7	6	5	4	3	2	1	0
CURR	A15	A14	A13	A12	A11	A10	A9	A8

CURRENT LOCAL DMA REGISTER 0,1 (CLDA0,1)

These two registers can be accessed to determine the current Local DMA Address.

	7	6	5	4	3	2	1	0
CLDA1	A15	A14	A13	A12	A11	A10	A9	A8
	7	6	5	4	3	2	1	0
CLDA0	A7	A6	A5	A4	A3	A2	A1	A0

Remote DMA Registers

REMOTE START ADDRESS REGISTERS (RSAR0,1)

Remote DMA operations are programmed via the Remote Start Address (RSAR0,1) and Remote Byte Count (RBCR0,1) registers. The Remote Start Address is used to point to the start of the block of data to be transferred and the Remote Byte Count is used to indicate the length of the block (in bytes).

	7	6	5	4	3	2	1	0
RSAR1	A15	A14	A13	A12	A11	A10	A9	A8
	7	6	5	4	3	2	1	0
RSAR0	A7	A6	A5	A4	A3	A2	A1	A0

REMOTE BYTE COUNT REGISTERS (RCB0,1)

	7	6	5	4	3	2	1	0
RBCR1	A15	A14	A13	A12	A11	A10	A9	A8
	7	6	5	4	3	2	1	0
RBCR0	A7	A6	A5	A4	A3	A2	A1	A0

Note:

RSAR0 programs the start address bits A0–A7.

RSAR1 programs the start address bits A8–A15.

Address incremented by two for word transfers, and by one for byte transfers. Byte count decremented by two for word transfers and by one for byte transfers.

RBCR0 programs LSB byte count.

RBCR1 programs MSB byte count.

CURRENT REMOTE DMA ADDRESS (CRDA0, CRDA1)

The Current Remote DMA Registers contain the current address of the Remote DMA. The bit assignment is shown below:

	7	6	5	4	3	2	1	0
CRDA1	A15	A14	A13	A12	A11	A10	A9	A8
	7	6	5	4	3	2	1	0
CRDA0	A7	A6	A5	A4	A3	A2	A1	A0

Physical Address Registers (PAR0–PAR5)

The physical address registers are used to compare the destination address of incoming packets for rejecting or accepting packets. Comparisons are performed on a byte-wide basis. The bit assignment shown below relates the sequence in PAR0–PAR5 to the bit sequence of the received packet.

	D7	D6	D5	D4	D3	D2	D1	D0
PAR0	DA7	DA6	DA5	DA4	DA3	DA2	DA1	DA0
PAR1	DA15	DA14	DA13	DA12	DA11	DA10	DA9	DA8
PAR2	DA23	DA22	DA21	DA20	DA19	DA18	DA17	DA16
PAR3	DA31	DA30	DA29	DA28	DA27	DA26	DA25	DA24
PAR4	DA39	DA38	DA37	DA36	DA35	DA34	DA33	DA32
PAR5	DA47	DA46	DA45	DA44	DA43	DA42	DA41	DA40

	Destination Address							Source	
P/S	DA0	DA1	DA2	DA3	....	DA46	DA47	SA0	...

Note:

P/S = Preamble, Synch

DA0 = Physical/Muftcast Bit

Multicast Address Registers (MAR0–MAR7)

The multicast address registers provide filtering of multicast addresses hashed by the CRC logic. All destination addresses are fed through the CRC logic and as the last bit of the destination address enters the CRC, the 6 most significant bits of the CRC generator are latched. These 6 bits are then decoded by a 1 of 64 decode to index a unique filter bit (FB0–63) in the multicast address registers. If the filter bit selected is set, the multicast packet is accepted. The sys-

Obsolete

5.0 Register Descriptions (Continued)

tem designer would use a program to determine which filter bits to set in the multicast registers. All multicast filter bits that correspond to multicast address accepted by the node are then set to one. To accept all multicast packets all of the registers are set to all ones.

Note: Although the hashing algorithm does not guarantee perfect filtering of multicast address, it will perfectly filter up to 64 multicast addresses if these addresses are chosen to map into unique locations in the multicast filter.

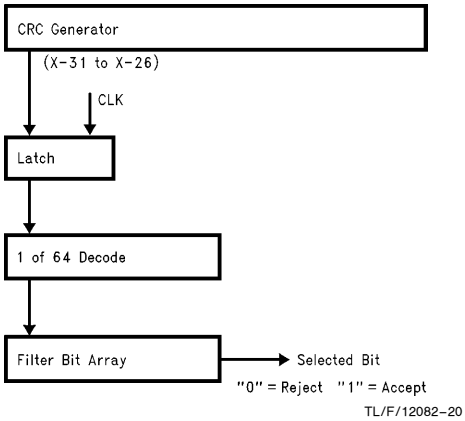

FIGURE 25. Multicast Addressing

6.0 Operation of DP83907

This section details the operation of the DP83907. The operations discussed are packet reception and transmission, bus operations, and loopback diagnostics.

6.1 TRANSMIT/RECEIVE PACKET ENCAPSULATION/ DECAPSULATION;

A standard IEEE 802.3 packet consists of the following fields: preamble, Start of Frame Delimiter (SFD), destination address, source address, length, data, and Frame Check Sequence (FCS). The typical format is shown in the figure following. The packets are Manchester encoded and decoded by the ENDEC module and transferred serially to the NIC module using NRZ data with a clock. All fields are of fixed length except for the data field. The DP83907 generates and appends the preamble, SFD and FCS field during transmission. The Preamble and SFD fields are stripped during reception. (The CRC is passed through to buffer memory during reception.)

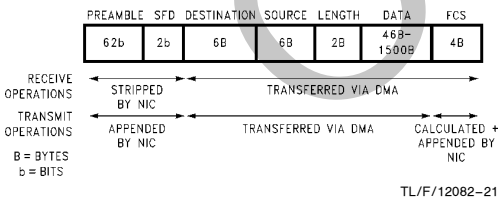

FIGURE 26. Ethernet Packet

Preamble and Start of Frame Delimiter (SFD)

The Manchester encoded alternating 1, 0 preamble field is used by the ENDEC to acquire bit synchronization with an incoming packet. When transmitted each packet contains 62 bits of alternating 1, 0 preamble. Some of this preamble will be lost as the packet travels through the network. The preamble field is stripped by the NIC module. Byte alignment is performed with the Start of Frame Delimiter (SFD) pattern which consists of two consecutive 1's. The DP83907 does not treat the SFD pattern as a byte, it detects only the two bit pattern. This allows any preceding preamble within the SFD to be used for phase locking.

Destination Address

The destination address indicates the destination of the packet on the network and is used to filter unwanted packets from reaching a node. There are three types of address formats supported by the DP83907: physical, multicast and broadcast. The physical address is a unique address that corresponds only to a single node. All physical addresses have an MSB of "0". These addresses are compared to the internally stored physical address registers. Each bit in the destination address must match in order for the DP83907 to accept the packet. Multicast addresses begin with an MSB of "1". The DP83907 filters multicast addresses using a standard hashing algorithm that maps all multicast addresses into a 6-bit value. This 6-bit value indexes a 64-bit array that filters the value. If the address consists of all 1's it is a broadcast address, indicating that the packet is intended for all nodes. A promiscuous mode allows reception of all packets: the destination address is not required to match any filters. Physical, broadcast, multicast, and promiscuous address modes can be selected.

Source Address

The source address is the physical address of the node that sent the packet. Source addresses cannot be multicast or broadcast addresses. This field is simply passed to buffer memory.

Length Field

The 2-byte length field indicates the number of bytes that are contained in the data field of the packet. This field is not interpreted by the DP83907.

Data Field

The data field consists of anywhere from 46 to 1500 bytes. Messages longer than 1500 bytes need to be broken into multiple packets. Messages shorter than 46 bytes will require appending a pad to bring the data field to the minimum length of 46 bytes. If the data field is padded, the number of valid data bytes is indicated in the length field. **The DP83907 does not strip or append pad bytes for short packets, or check for oversize packets.**

FCS Field

The Frame Check Sequence (FCS) is a 32-bit CRC field calculated and appended to a packet during transmission to allow detection of errors when a packet is received. During reception, error free packets result in a specific pattern in the CRC generator. Packets with improper CRC will be rejected. The AUTODIN II ($X^{32} + X^{26} + X^{23} + X^{22} + X^{16} + X^{12} + X^{11} + X^{10} + X^{8} + X^{7} + X^{5} + X^{4} + X^{2} + X^{1} + 1$) polynomial is used for the CRC calculations.

Obsolete

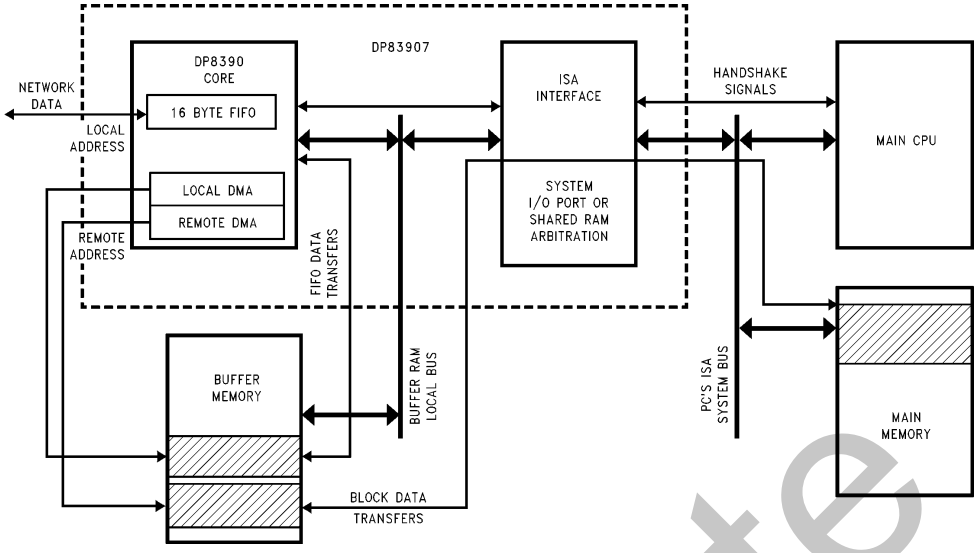

TL/F/12082–22

FIGURE 27. DP83907 Bus Architecture

6.2 BUFFER MEMORY ACCESS CONTROL (DMA)

The buffer memory control capabilities of the DP83907 greatly simplify the use of the DP83907 in typical configurations. The local DMA channel transfers data between the FIFO and memory. On transmission, the packet is DMA'd from memory to the FIFO in bursts. Should a collision occur (up to 15 times), the packet is re-transmitted with no processor intervention. On reception, packets are moved via DMA from the FIFO to the receive buffer ring (as explained below).

A Remote DMA channel is also provided on the DP83907 to accomplish transfers between a buffer memory and an internal Data Port when using the DP83907 in I/O Mode. This Remote DMA channel is not used when the DP83907 is used in a shared Memory mode. In this second mode the buffer memory is dual ported, and directly mapped into the system memory. In this mode the system CPU directly accesses the RAM under software control to transfer packet data.

The following sections describe the operation of the Local DMA channel for packet reception which is used in both modes. For Shared Memory mode the description of the Remote DMA does not apply.

For reference an example configuration using the DP83907 is shown in *Figure 27*.

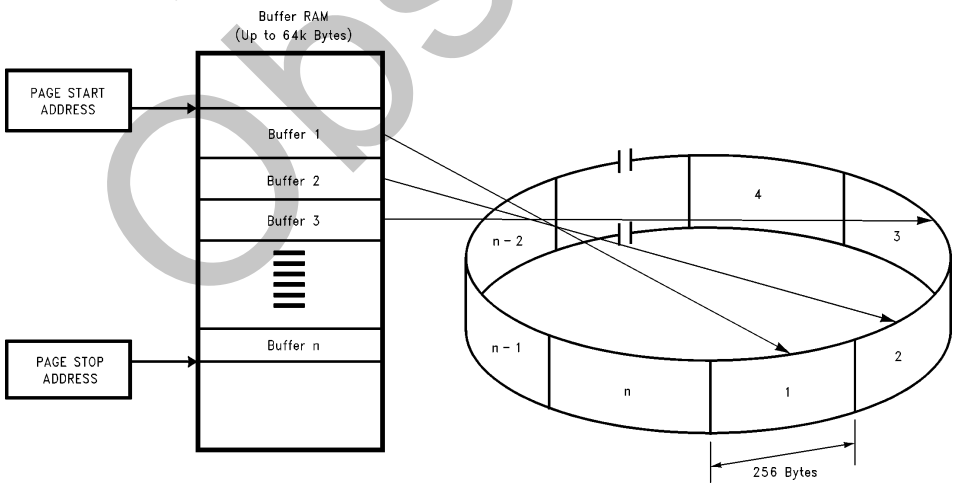

TL/F/12082–23

FIGURE 28. DP83907 Receive Buffer Ring

Obsolete

6.3 PACKET RECEPTION

The Local DMA receive channel uses a Buffer Ring Structure comprised of a series of contiguous fixed length 256 byte (128 word) buffers for storage of received packets. The location of the Receive Buffer Ring is programmed in two registers, a Page Start and a Page Stop Register. Ethernet packets consist of a distribution of shorter link control packets and longer data packets, the 256 byte buffer length provides a good compromise between short packets and longer packets to most efficiently use memory. In addition these buffers provide memory resources for storage of back-to-back packets in loaded networks. The assignment of buffers for storing packets is controlled by Buffer Management Logic in the DP83907. The Buffer Management Logic provides three basic functions: linking receive buffers for long packets, recovery of buffers when a packet is rejected, and recirculation of buffer pages that have been read by the host.

At initialization, a portion of the 64k byte (or 32k word) address space is reserved for the receive buffer ring. Two eight bit registers, the Page Start Address Register (PSTART) and the Page Stop Address Register (PSTOP) define the physical boundaries of where the buffers reside. The DP83907 treats the list of buffers as a logical ring; whenever the DMA address reaches the Page Stop Address, the DMA is reset to the Page Start Address.

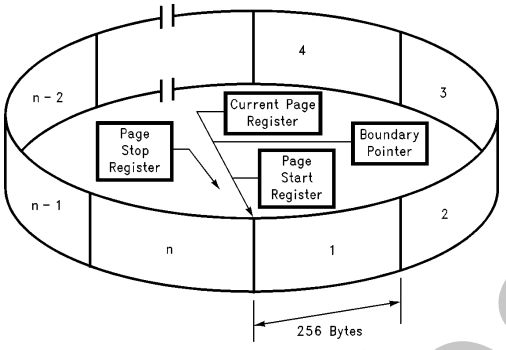

TL/F/12082–24

FIGURE 29. Buffer Ring at Initialization

Initialization of the Buffer Ring

Two static registers and two working registers control the operation of the Buffer Ring. These are the Page Start Register, Page Stop Register (both described previously), the Current Page Register and the Boundary Pointer Register. The Current Page Register points to the first buffer used to store a packet and is used to restore the DMA for writing status to the Buffer Ring or for restoring the DMA address in the event of a Runt packet, a CRC, or Frame Alignment error. The Boundary Register points to the first packet in the Ring not yet read by the host. If the local DMA address ever reaches the Boundary, reception is aborted. The Boundary Pointer is also used to initialize the Remote DMA for removing a packet and is advanced when a packet is removed. A simple analogy to remember the function of these registers is that the Current Page Register acts as a Write Pointer and the Boundary Pointer acts as a Read Pointer.

Note 1: At initialization, the Page Start Register value should be loaded into both the Current Page Register and the Boundary Pointer Register, if using the Send Packet Command. If using manual Remote Reads, the Current Page Register must always remain 1 + Boundary Register.

Note 2: The Page Start Register must not be initialized to 00H.

Beginning of Reception

When the first packet begins arriving the DP83907 begins storing the packet at the location pointed to by the Current Page Register. An offset of 4 bytes is saved in this first buffer to allow room for storing receive status corresponding to this packet.

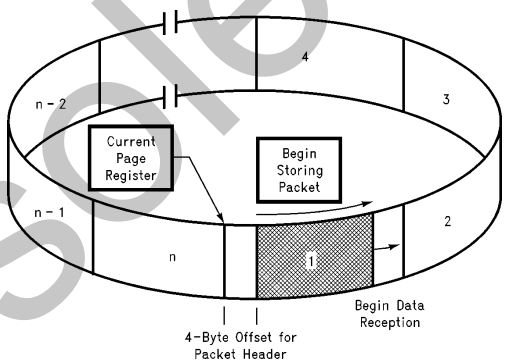

TL/F/12082-25

FIGURE 30. Received Packet Enters the Buffer Pages

Obsolete

6.0 Operation of DP83907 (Continued)

Linking Receive Buffer Pages

If the length of the packet exhausts the first 256 byte buffer, the DMA performs a forward link to the next buffer to store the remainder of the packet. For a maximal length packet the buffer logic will link six buffers to store the entire packet. Buffers cannot be skipped when linking, a packet will always be stored in contiguous buffers. Before the next buffer can be linked, the Buffer Management Logic performs two comparisons. The first comparison tests for equality between the DMA address of the next buffer and the contents of the Page Stop Register. If the buffer address equals the Page Stop Register, the buffer management logic will restore the DMA to the first buffer in the Receive Buffer Ring value programmed in the Page Start Address Register. The second comparison tests for equality between the DMA address of the next buffer address and the contents of the Boundary Pointer Register. If the two values are equal the reception is aborted. The Boundary Pointer Register can be used to protect against overwrfting any area in the receive buffer ring that has not yet been read. When linking buffers, buffer management will never cross this pointer, effectively avoiding any overwrites. If the buffer address does not match either the Boundary Pointer or Page Stop Address, the link to the next buffer is performed.

Linking Buffers

Before the DMA can enter the next contiguous 256 byte buffer, the address is checked for equality to PSTOP and to the Boundary Pointer. If neither are reached, the DMA is allowed to use the next buffer.

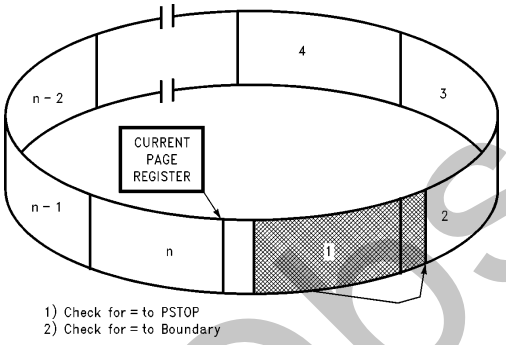

TL/F/12082–26

FIGURE 31. Linking Receive Buffer Pages

Buffer Ring Overflow

If the Buffer Ring has been filled and the DMA reaches the Boundary Pointer Address, reception of the incoming packet will be aborted by the DP83907. Thus, the packets previously received and still contained in the Ring will not be destroyed.

In heavily loaded networks which cause overflows of the Receive Buffer Ring, the DP83907 may disable the local DMA and suspend further receptions even if the Boundary register is advanced beyond the Current register. In the event that the DP83907 should encounter a receive buffer overflow, it is necessary to implement the following routine. A receive buffer overflow is indicated by the DP83907's assertion of the overflow bit (OVW) in the Interrupt Status Register (ISR).

If this routine is not adhered to, the DP83907 may act in an unpredictable manner. It should also be noted that it is not permissible to service an overflow interrupt by continuing to empty packets from the receive buffer without implementing the prescribed overflow routine. A flow chart of the DP83907's overflow routine can be found in *Figure 32*.

Note: It is necessary to define a variable in the driver, which will be called "Resend".

1) Read and store the value of the TXP bit in the DP83907's Command Register.
2) Issue the STOP command to the DP83907. This is accomplished by setting the STP bit in the DP83907's Command Register. Writing 21H to the Command Register will stop the DP83907.
3) Wait for at least 1.6 ms. Since the DP83907 will complete any transmission or reception that is in progress, it is necessary to time out for the maximum possible duration of an Ethernet transmission or reception. By waiting 1.6 ms this is achieved with some guard band added. Previously, it was recommended that the RST bit of the nterrupt Status Register be polled to insure that the pending transmission or reception is completed. This bit is not a reliable indicator and subsequently should be ignored.

Obsolete

6.0 Operation of DP83907 (Continued)

4) Clear the DP83907's Remote Byte Count registers (RBCR0 and RBCR1).
5) Read the stored value of the TXP bit from step 1, above.

   If this value is a 0, set the ''Resend'' variable to a 0 and jump to step 6.

   If this value is a 1, read the DP83907's Interrupt Status Register. If either the Packet Transmitted bit (PTX) or Transmit Error bit (TXE) is set to a 1, set the ''Resend'' variable to a 0 and jump to step 6. If neither of these bits is set, place a 1 in the ''Resend'' variable and jump to step 6.

   This step determines if there was a transmission in progress when the stop command was issued in step 2. If there was a transmission in progress, the DP83907's ISR is read to determine whether or not the packet was recognized by the DP83907. If neither the PTX nor TXE bit was set, then the packet will essentially be lost and retransmitted only after a time-out takes place in the upper level software. By determining that the packet was lost at the driver level, a transmit command can be reissued to the DP83907 once the overflow routine is completed (as in step 11). Also, it is possible for the DP83907 to defer indefinitely, when it is stopped on a busy network. Step 5 also alleviates this problem. Step 5 is essential and should not be omitted from the overflow routine, in order for the DP83907 to operate correctly.
6) Place the DP83907 in either mode 1 or mode 2 loopback. This can be accomplished by setting bits D2 and D1, of the Transmit Configuration Register, to ''0,1'' or ''1,0'', respectively.
7) Issue the START command to the DP83907. This can be accomplished by writing 22H to the Command Register. This is necessary to activate the DP83907's Remote DMA channel.
8) Remove one or more packets from the receive buffer ring.
9) Reset the overwrite warning (OVW, overflow) bit in the Interrupt Status Register.
10) Take the DP83907 out of loopback. This is done by writing the Transmit Configuration Register with the value it contains during normal operation. (Bits D2 and D1 should both be programmed to 0.)
11) If the ''Resend'' variable is set to a 1, reset the ''Resend'' variable and reissue the transmit command. This is done by writing a value of 26H to the Command Register. If the ''Resend'' variable is 0, nothing needs to be done.

Note 1: If Remote DMA is not being used, the DP83907 does not need to be started before packets can be removed from the receive buffer ring. Hence, step 8 could be done before step 7, eliminating or reducing the time spent polling in step 5.

Note 2: When the DP83907 is in STOP mode, the Missed Packet Tally counter is disabled.

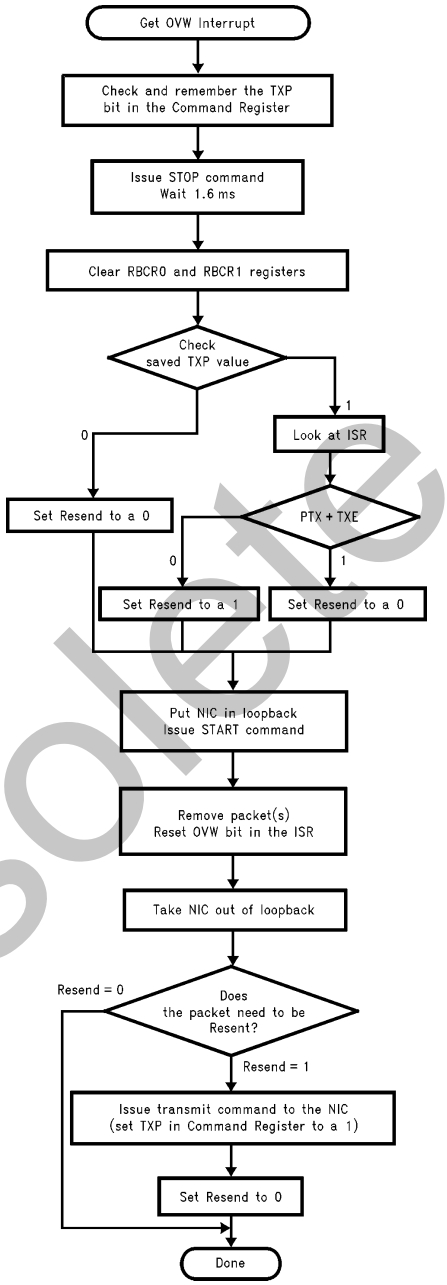

TL/F/12082–27

FIGURE 32. Overflow Routine

Obsolete

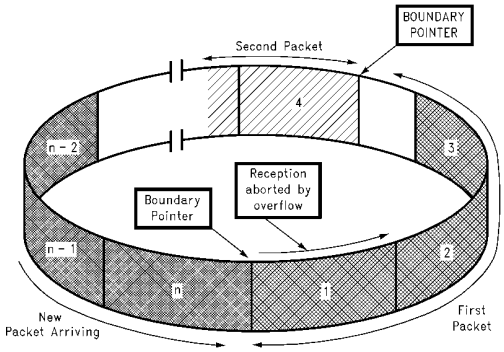

TL/F/12082–28

FIGURE 33. Received Packet Aborted if it Hits Boundary

Enabling the DP83907 on an Active Network

After the DP83907 has been initialized the procedure for disabling and then re-enabling the DP83907 on the network is similar to handling Receive Buffer Ring overflow as described previously.

1) Program Command Register for page 0 (Command Register = 21H)
2) Initialize Data Configuration Register (DCR)
3) Clear Remote Byte Count Registers (RBCR0, RBCR1) if using Remote DMA.
4) Initialize Receive Configuration Register (RCR)
5) Place the DP83907 in LOOPBACK mode 1 or 2 (Transmit Configuration Register = 02H or 04H)
6) Initialize Receive Buffer Ring: Boundary Pointer (BNDRY), Page Start (PSTART), and Page Stop (PSTOP)
7) Clear Interrupt Status Register (ISR) by writing OFFH to it.
8) Initialize Interrupt Mask Register (IMR)
9) Program Command Register for page 1 (Command Register = 61H)
   i) Initialize Physical Address Registers (PAR0–PAR5)
   ii) Initialize Multicast Address Registers (MAR0–MAR7)
   iii) Initialize CURRENT pointer
10) Put DP83907 in START mode (Command Register = 22H). The local receive DMA is still not active since the DP83907 is in LOOPBACK.
11) Initialize the Transmit Configuration for the intended value. The DP83907 is now ready for transmission and reception.

End of Packet Operations

At the end of the packet the DP83907 determines whether the received packet is to be accepted or rejected. It either branches to a routine to store the Buffer Header or to another routine that recovers the buffers used to store the packet.

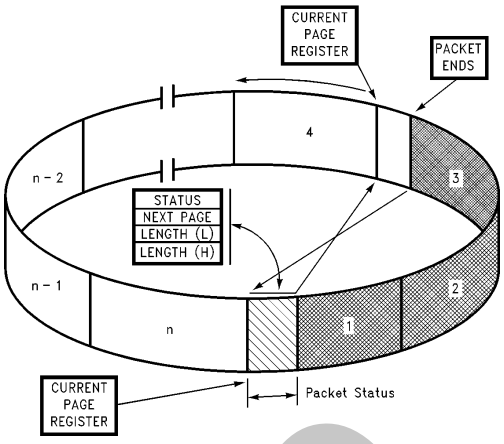

TL/F/12082–29

FIGURE 34. Termination of Received Packet-Packet Accepted

Successful Reception

If the packet is successfully received, the DMA is restored to the first buffer used to store the packet (pointed to by the Current Page Register). The DMA then stores the Receive Status, a Pointer to where the next packet will be stored (Buffer 4) and the number of received bytes. Note that the remaining bytes in the last buffer are discarded and reception of the next packet begins on the next empty 256-byte buffer boundary. The Current Page Register is then initialized to the next available buffer in the Buffer Ring. (The location of the next buffer had been previously calculated and temporarily stored in an internal scratchpad register.)

Buffer Recovery for Rejected Packets

If the packet is a runt packet or contains CRC or Frame Alignment errors, it is rejected. The buffer management logic resets the DMA back to the first buffer page used to store the packet (pointed to by CURR), recovering all buffers that had been used to store the rejected packet. This operation will not be performed if the DP83907 is programmed to accept either runt packets or packets with CRC or Frame Alignment errors. The received CRC is always stored in buffer memory after the last byte of received data for the packet.

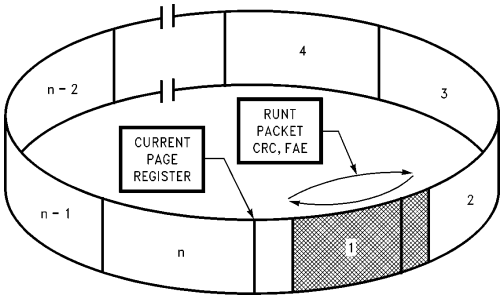

TL/F/12082–30

FIGURE 35. Termination of Receive Packet-Packet Reject

Obsolete

6.0 Operation of DP83907 (Continued)

Error Recovery

If the packet is rejected as shown, the DMA is restored by the DP83907 by reprogramming the DMA starting address pointed to by the Current Page Register.

Storage Format for Received Packets

The following diagrams describe the format for how received packets are placed into memory by the local DMA channel. These modes are selected in the Data Configuration Register.

AD15	AD8	AD7	AD0
Next Packet Pointer		Receive Status	
Receive Byte Count 1		Receive Byte Count 0	
Byte 2		Byte 1	

BOS = 0, WTS = 1 in Data Configuration Register. This format is used with Series 32xxx, or 808xx processors.

AD15	AD8	AD7	AD0
Next Packet Pointer		Receive Status	
Receive Byte Count 0		Receive Byte Count 1	
Byte 1		Byte 2	

BOS = 1, WTS = 1 in Data Configuration Register. This format is used with 680 x 0 type processors. (Note: the Receive Count ordering remains the same for BOS = 0 or 1.)

Receive Status
Next Packet Pointer
Receive Byte Count 0
Receive Byte Count 1
Byte 0
Byte 1

BOS = 0 WTS = 0 in Data Configuration Register. This format is used with general 8-bit processors.

6.4 PACKET TRANSMISSION

The Local DMA is also used during transmission of a packet. Three registers control the DMA transfer during transmission, a Transmit Page Start Address Register (TPSR) and the Transmit Byte Count Registers (TBCR0, 1). When the DP83907 receives a command to transmit the packet pointed to by these registers, buffer memory data will be moved into the FIFO as required during transmission. The DP83907 will generate and append the preamble, synch and CRC fields.

General Transmit Packet Format

Transmit	Destination Address	6 Bytes
Byte	Source Address	6 Bytes
Count	Type/Length	2 Bytes
TBCR0, 1	Data Pad (if data < 46 Bytes)	≥ 46 Bytes

Transmit Packet Assembly

The DP83907 requires a contiguous assembled packet with the format shown. The transmit byte count includes the Destination Address, Source Address, Length Field and Data. It does not include preamble and CRC. When transmitting data smaller than 46 bytes, the packet must be padded to a minimum size of 64 bytes. The programmer is responsible for adding and stripping pad bytes.

The packets are placed in the buffer RAM by the system. In I/O Mode the system programs the NIC Core's Remote DMA to mode the data from the data port to the RAM handshaking with system transfers loading the I/O data port. In Shared Memory Mode the packets are written directly to the RAM by system using standard memory transfer instructions (MOV).

For I/O mode the data transfer must be 16 bits (1 word) when in 16 bit mode, and 8 bits when the DP83907 is set in 8 bit mode. The data width is selected by setting the WTS bit in the Data Configuration Register and setting the DWID pin for the proper mode.

In Shared Memory mode data transfer can be accomplished by using either 8- or 16-bit data transfer instructions, because this mode responds to 8/16 bit data signaling on the ISA bus. In this mode Shared Memory Control Register 2 bit 6 sets the bus interface data width, and the NIC Core's data width is set by the WTS bit in the Data Configuration Register.

Transmission

Prior to transmission, the TPSR (Transmit Page Start Register) and TBCR0, TBCR1 (Transmit Byte Count Registers) must be initialized. To initiate transmission of the packet the TXP bit in the Command Register is set. The Transmit Status Register (TSR) is cleared and the DP83907 begins to prefetch transmit data from memory (unless the DP83907 is currently receiving). If the interframe gap has timed out the DP83907 will begin transmission.

Obsolete

6.0 Operation of DP83907 (Continued)

Conditions Required to Begin Transmission

In order to transmit a packet, the following three conditions must be met:

1. The Interframe Gap Timer has timed out the first 6.4 μs of the Interframe Gap
2. At least one byte has entered the FIFO. (This indicates that the burst transfer has been started)
3. If a collision had been detected then before transmission the packet time must have timed out.

In typical systems the DP83907 prefetches the first burst of bytes before the 6.4 μs timer expires. The time during which DP83907 transmits preamble can also be used to load the FIFO.

Note: If carrier sense is asserted before a byte has been loaded into the FIFO, the DP83907 will become a receiver.

Collision Recovery

During transmission, the Buffer Management logic monitors the transmit circuitry to determine if a collision has occurred. If a collision is detected, the Buffer Management logic will reset the FIFO and restore the Transmit DMA pointers for retransmission of the packet. The COL bit will be set in the TSR and the NCR (Number of Collisions Register) will be incremented. If 15 retransmissions each result in a collision the transmission will be aborted and the ABT bit in the TSR will be set.

Note: NCR reads as zeroes if excessive collisions are encountered.

Transmit Packet Assembly Format

The following diagrams describe the format for how packets must be assembled prior to transmission for different byte ordering schemes. The various formats are selected in the Data Configuration Register.

D15 D8	D7 D0
Destination Address 1	Destination Address 0
Destination Address 3	Destination Address 2
Destination Address 5	Destination Address 4
Source Address 1	Source Address 0
Source Address 3	Source Address 2
Source Address 5	Source Address 4
Type/Length 1	Type Length 0
Data 1	Data 0

BOS = 0, WTS = 1 in Data Configuration Register.

This format is used with Series 32xxx, or 808xx processors.

D15 D8	D7 D0
Destination Address 0	Destination Address 1
Destination Address 2	Destination Address 3
Destination Address 4	Destination Address 5
Source Address 0	Source Address 1
Source Address 2	Source Address 3
Source Address 4	Source Address 5
Type Length 0	Type/Length 1
Data 0	Data 1

BOS = 1, WTS = 1 in Data Configuration Register.

This format is used with 680x0 type processors.

D7 D0
Destination Address 0
Destination Address 1
Destination Address 2
Destination Address 3
Destination Address 4
Destination Address 5
Source Address 0
Source Address 1
Source Address 2
Source Address 3
Source Address 4
Source Address 5

BOS = 0, WTS = 0 in Data Configuration Register.

This format is used with general 8 bit processors.

Note: All examples above will result in a transmission of a packet in order of DA0, DA1, DA3... bits within each byte will be transmitted least significant bit first.

DA = Destination Address

Obsolete

6.0 Operation of DP83907 (Continued)

6.5 LOOPBACK DIAGNOSTICS

Three forms of local loopback are provided on the DP83907. The user has the ability to loopback through the deserializer on the controller, through the ENDEC module or transceiver. **Because of the half duplex architecture of the DP83907, loopback testing Is a special mode of operation with the following restrictions:**

Restrictions During Loopback

The FIFO is split into two halves, one half is used for transmission the other for reception. Only 8-bit fields can be fetched from memory so two tests are required for 16-bit systems to verify integrity of the entire data path. During loopback the maximum latency to obtain access to the buffer memory is 2.0 μs. Systems that wish to use the loopback test yet do not meet this latency can limit the loopback packet to 7 bytes without experiencing underflow. Only the last 8 bytes of the loopback packet are retained in the FIFO. The last 8 bytes can be read through the FIFO register which will advance through the FIFO to allow reading the receive packet sequentially.

Destination Address	= 6 bytes Station Physical Address
Source Address	= 6 bytes Station Physical Address
Length	2 bytes
Data	= 46 to 1500 bytes
CRC	Appended by DP8307 Controller if CRC = 0 in TCR

When in word-wide mode with Byte Order Select set, the loopback packet must be assembled in the even byte locations as shown below. (The loopback only operated with byte wide transfers.)

LS Byte (D8–D15)	MS Byte (D0–D7)
	Destination
	Source
	Length
	Data
	CRS

WTS = 1 BOS = 1 (DCR Bits)

When in word-wide mode with Byte Order Select low, the following format must be used for the loopback packet.

MS Byte (D8–D15)	LS Byte (D0–D7)
Destination	
Source	
Length	
Data	
CRS	

WTS = 1 BOS = 0 (DCR Bits)

Note: When using loopback in word mode 2n bytes must be programmed in the TBCR0, 1. When n = actual number of bytes assembled in even or odd location.

To initiate a loopback the user first assembles the loopback packet then selects the type of loopback using the Transmit Configuration register bits LB0, LB1. The transmit configuration register must also be set to enable or disable CRC generation during transmission. The user then issues a normal transmit command to send the packet. During loopback the receiver checks for an address match and if CRC bit in the TCR is set, the receiver will also check the CRC. The last 8 bytes of the loopback packet are buffered and can read out of the FIFO using FIFO read port.

Loopback Modes

MODE1: Loopback Through the DP83907 Controller Module (LB1 = 0, LB0 = 1): If this loopback is used, The DP83907 Module's serializer is connected to the deserializer.

MODE 2: Loopback Through the ENDEC Module (LB1 = 1, LB0 = 0): If the loopback is to be performed through the SNI, the DP83907 provides a control (LPBK) that forces the ENDEC module to loopback all signals.

MODE 3: Loopback to the external coax interface or twisted pair interface module (LB1 = 1, LB0 = 1).

Packets can be transmitted to the cable in loopback mode to check all of the transmit and receive paths and the cable itself. If, in twisted pair mode, there is a link fail the transmitter will be disabled which could give misleading results in Mode 3. The link integrity should be checked, by reading Configuration Register B, before this test.

Reading the Loopback Packet

The last eight bytes of a received packet can be examined by 8 consecutive reads of the FIFO register. The FIFO pointer is increment after the rising edge of the CPU's read strobe by internally synchronizing and advancing the pointer. This may take up to four bus clock cycles, if the pointer has not been incremented by the time the CPU reads the FIFO register again, the DP83907 will insert wait states.

Note: The FIFO may only be read during Loopback. Reading the FIFO at any other time will cause the DP83907 to malfunction.

Alignment of the Received Packet In the FIFO

Reception of the packet in the FIFO begins at location zero, after the FIFO pointer reaches the last location in the FIFO, the pointer wraps to the top of the FIFO overwriting the previously received data. This process continued until the last byte is received. The DP83907 then appends the received byte count in the next two locations of the FIFO. The contents of the Upper Byte Count are also copied to the next FIFO location. The number of bytes used in the loopback packet determined the alignment of the packet in the FIFO. The alignment for a 64-byte packet is shown below.

FIFO Location	FIFO Contents		
0	Lower Byte Count	→	First Byte Read
1	Upper Byte Count	→	Second Byte Read
2	Upper Byte Count		•
3	Last Byte		•
4	CRC1		•
5	CRC2		•
6	CRC3		•
7	CRC4	→	Last Byte Read

Obsolete

6.0 Operation of DP83907 (Continued)

For the following alignment in the FIFO the packet length should be (N x 8) + 5 Bytes. Note that if the CRC bit in the TCR is set, CRC will not be appended by the transmitter. If the CRC is appended by the transmitter, the 1st four bytes, bytes N-3 to N, correspond to the CRC.

FIFO Location	FIFO Contents		
0	Byte N-4	→	First Byte Read
1	Byte N-3 (CRC1)	→	Second Byte Read
2	Byte N-2 (CRC2)		•
3	Byte N-1 (CRC3)		•
4	Byte N (CRC4)		•
5	Lower Byte Count		•
6	Upper Byte Count		•
7	Upper Byte Count	→	Last Byte Read

Loopback Tests

Loopback capabilities are provided to allow certain tests to be performed to validate operation of the DP83907 prior to transmitting and receiving packets on a live network. Typically these tests may be performed during power up of a node. The diagnostic provides support to verify the following:

1) Verify integrity of data path. Received data is checked against transmitted data.
2) Verify CRC logic's capability to generate good CRC on transmit, verify CRC on receive (good or bad CRC).
3) Verify that the Address Recognition Logic can
   a) Recognize address match packets
   b) Reject packets that fail to match an address

Loopback Operation In the DP83907 Controller

Loopback is a modified form of transmission using only half of the FIFO. This places certain restrictions on the use of loopback testing. When loopback mode is selected in the TCR, the FIFO is spilt. A packet should be assembled in memory with programming of TPSR and TBCR0, TBCR1 registers. When the transmit command is issued the following operations occur:

TRANSMITTER ACTIONS

1) Data is transferred from memory by the DMA until the FIFO is filled. For each transfer TBCR0 and TBCR1 are decremented. (Subsequent burst transfers are initiated when the number of bytes in the FIFO drops below the programmed threshold.)
2) The DP83907 generates 56 bits of preamble followed by an 8-bit synch pattern.
3) Data transferred from FIFO to serializer.
4) If CRC = 1 in TCR, no CRC calculated by DP83907, the last byte transmitted is the last byte from the FIFO (Allows software CRC to be appended). If CRC = 0, DP83907 calculates and appends four bytes of CRC.
5) At end of Transmission PTX bit set in ISR.

RECEIVER ACTIONS

1) Wait for synch, all preamble stripped.
2) Store packet in FIFO, increment receive byte count for each incoming byte.
3) If CRC = 0 in TRC, receiver checks incoming packet for CRC errors. If CRC = 1 in TCR, receiver does not check CRC errors, CRC error bit always set in RSR (for address matching packets).
4) At end of receive, receive byte count written into FIFO, receive status register is updated. The PRX bit is typically set in the RSR even if the address does not match. If CRC errors are forced, the packet must match the address filters in order for the CRC error bit in the RS to be set.

EXAMPLES

The following examples show what results can be expected from a properly operating DP83907 during loopback. The restrictions and results of each type of loopback are listed for reference. The loopback tests are divided into two sets of tests. One to verify the data path, CRC generation and byte count through all three paths. The second set of tests uses internal loopback to verify the receiver's CRC checking and address recognition. For all of the tests the DCR was programmed to 40H.

Path	TCR	RCR	TSR	RSR	ISR
DP83907 Internal	02	00	53 (Note 1)	02 (Note 2)	02 (Note 3)

Note 1: Since carrier sense and collision detect are generated in the ENDEC module. They are blocked during internal loopbaok, carrier and CD heartbeat are not seen and the CRS and CDH bits are set.

Note 2: CRC errors are always indicated by receiver if CRC is appended by the transmitter.

Note 3: Only the PTX bit in the ISR is set, the PRX bit is only set if status is written to memory. In loopback this action does not occur and the PRX bit remains 0 for all loopbaok modes.

Note 4: All values are hex.

Path	TCR	RCR	TSR	RSR	ISR
DP83907 Internal	04	00	43 (Note 1)	02	02

Note 1: CDH is set, CRS is not set since it is generated by the external encoder/decoder.

Path	TCR	RCR	TSR	RSR	ISR
DP83907 Internal	06	00	03 (Note 1)	02	02 (Note 2)

Note 1: CDH and CRS should not be set. The TSR however, could also contaln 01H, 03H, 07H and a variety of other values depending on whether collisions were encountered or the packet was deferred.

Note 2: Will contain O8H if packet is not transmittable.

Note 3: During external loopback the DP83907 Controller is now exposed to network traffic, it is therefore possible for the contents of both the Receive portion of the FIFO and the RSR to be corrupted by any other paoket on the network. Thus in a live network the contents of the FIF0 and RSR should not be depended on. The DP83907 will still abide by the standard CSMA/CD protocol in external loopback mode. (i.e. The network will not be disturbed by the loopback paoket).

Note 4: All values are hex.

Obsolete

CRC and Address Recognition

The next three tests exercise the address recognition logic and CRC. These tests should be performed using internal loopback only so that the DP83907 is isolated from interference from the network. These tests also require the capability to generate CRC in software.

The address recognition logic cannot be directly tested. The CRC and FAE bits in the RSR are only set if the address if the packet matches the address filters. If errors are expected to be set and they are not set, the packet has been rejected on the basis of an address mismatch. The following sequence of packets will test the address recognition logic. The DCR should be set to 40H, the TCR should be set to 03H with a software generated CRC.

Packet Contents		Results	
Test	**Address**	**CRC**	**RSR**
Test A	Matching	Good	01 (Note 1)
Test B	Matching	Bad	02 (Note 2)
Test C	Non-Matching	Bad	01

Note 1: Status will read 21H if multicast address used.

Note 2: Status will read 22H if multtcast address used.

Note 3: In test A, the RSR is set up. In test B the address is found to match since the CRC is flagged as bad. Test C proves that the address recognition logic can distinguish a bad address and does not notify the RSR of the bad CRC. The receiving CRC is proven to work in test A and test B.

Note 4: All values are hex.

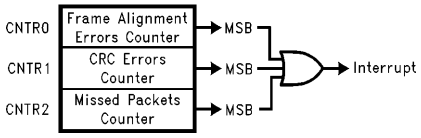

TL/F/12082–31

FIGURE 36. Tally Counters

Network Management Functions

Network management capabilities are required for maintenance and planning of a local area network. The DP83907 supports the minimum requirement for network management in hardware, the remaining requirements can be met with software. Software alone can not track during reception of packets: CRC errors, Frame Alignment errors, and missed packets, *Figure 36*.

Since errored packets can be rejected, the status associated with these packets is lost unless the CPU can access the Receive Status Register before the next packer arrives. In situations where another packet arrives very quickly, the CPU may have no opportunity to do this. The DP83907 Controller counts the number of packets with CRC errors and Frame Alignment errors. 8-bit counters have been selected to reduce overhead. The counters will generate interrupts whenever their MSBs are set so that a software routine can accumulate the network statistics and reset the counter betore overflow occurs. The counters are sticky so that when they reach a count of 192 (C0H) counting is halted. An additional counter is provided to count the number of packets the DP83907 misses due to buffer overflow or being off-line. The structure of the counters is shown in *Figure 36*.

Additional information required for network management is available in the Receive and Transmit Status Registers. Transmit status is available after each transmission for information regarding events during transmission.

Typically, the following statistics might be gathered in software:

Traffic: Frames Sent OK
Frames Received OK
Multicast Frames Received
Packets Lost Due to Lack of Resources
Retries/Packet

Errors: CRC Errors
Alignment Errors
Excessive Collisions
Packet with Length Errors
Heartbeat Failure

6.6 MEMORY ARBITRATION AND BUS OPERATION

The DP83907 will always operate as a slave device on it's peripheral interface to the ISA bus. However on the memory bus, the DP83907 Controller operates in three possible modes:

1. Bus Master of Local Packet Buffer RAM
2. Bus Slave when accessed by the CPU via the Bus Interface
3. Idle, when no activity is occurring.

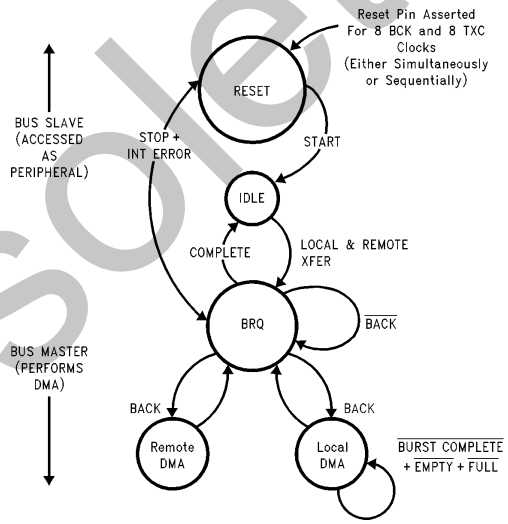

TL/F/12082–32

FIGURE 37. DP8390 Core Bus States

Upon power-up the DP83907 is in an indeterminate state. After receiving a hardware reset the DP83907 is a bus slave in the Reset State, the receiver and transmitter are both disabled in this state. The reset state can be re-entered under four conditions, soft reset (Stop Command), register reset (reset port), hard reset (RESET input) or an error that shuts down the receiver of transmitter (FIFO underflow or overflow, receive buffer ring overflow).

After initialization of registers, the DP83907 Controller is issued a Start command and the DP83907 enters Idle state. Until the DMA is required the DP83907 remains in idle state.

Obsolete

6.0 Operation of DP83907 (Continued)

The idle state is exited and the DP83907 will drive the local memory bus when a request from the FIFO in the DP8390 (NIC) core causes the memory bus interface logic to issue a read or write operation, such as when the DP83907 is transmitting or receiving data.

The NIC Core's Remote DMA also requests access from the memory bus. When software programs an I/O data transfer between the CPU and the buffer RAM, the Remote DMA controls this request.

All Local DMA transfers are burst transfers, the DMA will transfer an exact burst of bytes programmed in the Data Configuration Register (DCR) then relinquish the memory bus. If there are remaining bytes in the FIFO the next burst will not be initiated until the FIFO threshold is exceeded.

I/O Mode Operation

In I/O mode the DP83907 transfers data to and from the packet buffer RAM by utilizing the Remote DMA logic which is programmed by the main system CPU to transfer data through the DP83907's internal data

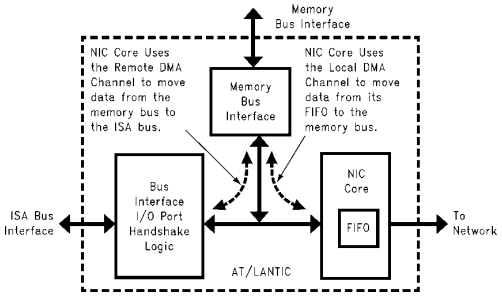

TL/F/12082–33

FIGURE 38. I/O Operation: All Data Transfers and Arbitration is Controlled by the NIC Core

INTERLEAVED LOCAL/REMOTE OPERATION

When in I/O mode the remote DMA is used to transfer data to/from the main system. If a remote DMA transfer is initiated or in progress when a packet is being received or transmitted, the Remote DMA transfers will be interrupted for higher priority Local DMA transfers. When the Local DMA transfer is completed the Remote DMA will rearbitrate for the bus and continue its transfers.

If the FIFO requires service while a remote DMA is in progress the Local DMA burst is appended to the Remote Transfer. When switching from a local transfer to a remote transfer there is a break to allow the CPU to fairly contend for the bus.

REMOTE DMA BI-DIRECTIONAL PORT

The Remote DMA transfers data between the local buffer memory and the internal bi-directional port (memory to I/O transfer).

This transfer is arbitrated on a transfer by transfer basis versus the burst transfer mode used for Local DMA transfers. This bi-directional port is integrated onto the DP83907, and is read/written by the host. All transfers through this port are asynchronous. At any one time transfers are limited to one direction, either form the port to local buffer memory (Remote Write) or form local buffer memory to the port (Remote Read).

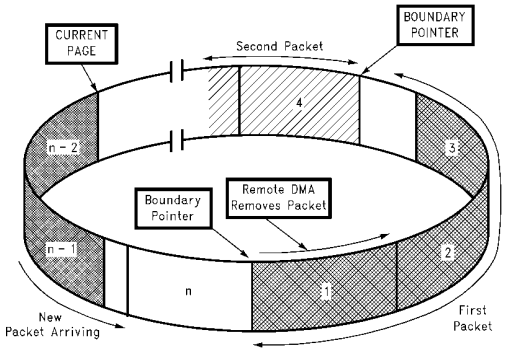

TL/F/12082–34

FIGURE 39. 1st Received Packet Removed by Remote DMA

I/O MODE REMOVING PACKETS FROM RING

Network activity is isolated on a local bus, where the DP83907's local DMA channel performs burst transfers between the buffer memory and the DP83907's FIFO. The Remote DMA transfers data between the buffer memory and the host memory via the internal bi-directional I/O port. The Remote DMA provides local addressing capability and is used as a slave DMA by the host. The host system reads the I/O port to transfer data between the system and I/O port. The DP83907 allows Local and Remote DMA operations to be interleaved.

Packets are removed from the ring using the Remote DMA. When using the Remote DMA the Send Packet command can be used. This programs the Remote DMA to automatically remove the received packet pointed to by the Boundary Pointer. At the end of the transfer, the DP83907 moves the Boundary Pointer, freeing additional buffers for reception. The Boundary Pointer can also be moved manually by programming the Boundary Register. Care should be taken to keep the Boundary Pointer at least one buffer behind the Current Page Pointer.

Data transfer by the Remote DMA to the integrated I/O data port is dependent on whether the DP83907 is set into 8 bit mode or 16 bit mode. In 8 bit mode all transfers are 8 bits (1 byte) wide. When in 16 bit mode all transfers are 16 bits (1 word) wide. The data width is selected by setting the WTS bit in the data Configuration Register and setting the DWID pin for the proper mode.

The following is a suggested method for maintaining the Receive Buffer Ring pointers:

1. At initialization, set up a software variable (next_pkt) to indicate where the next packet will be read. At the beginning of each Remote Read DMA operation, the value of next_pkt will be loaded into RSAR0 and RSAR1.
2. When initializing the DP83907 Controller set:

   BNDRY = PSTART

   CURR = PSTART + 1

   next_pkt = PSTART + 1
3. After a packet is DMAed from the Receive Buffer Ring, the Next Page Pointer (second byte in the DP83907 Controller buffer header is used to update BNDRY and next_pkt.

Obsolete

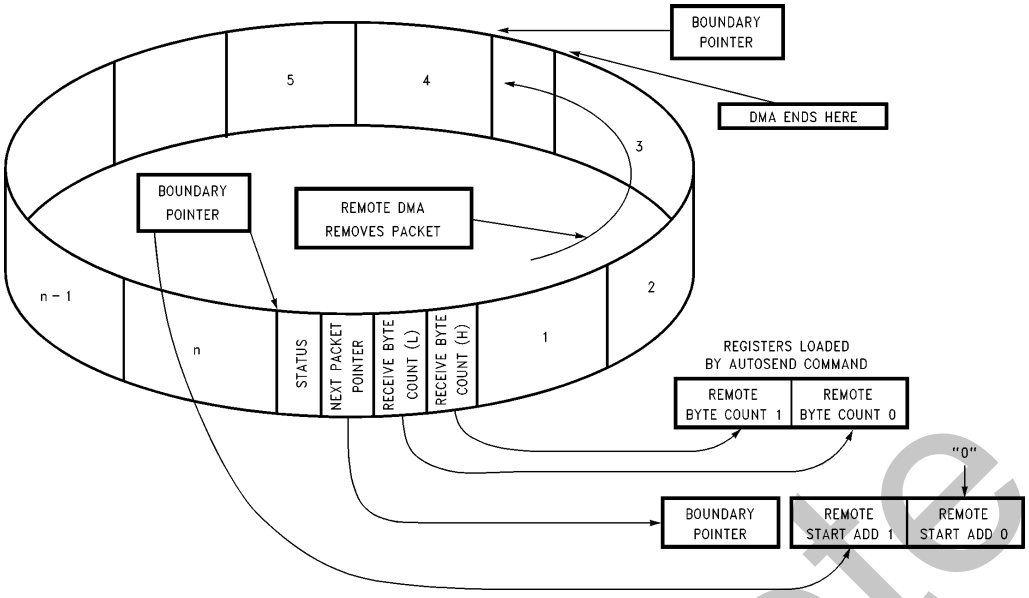

TL/F/12082–35

FIGURE 40. Remote DMA Auto Initialization from Buffer Ring

next_pkt = Next Page Pointer

BNDRY = Next Page Pointer − 1

If BNDRY < PSTART then BNDRY = PSTOP − 1

Note the size of the Receive Buffer Ring is reduced by one 256-byte buffer, this will not, however impede the operation of the DP83907. The advantage of this scheme is that it easily differentiates between buffer full and buffer empty: it is full if BNDRY = CURR; empty when BNDRY = CURR-1. If, in I/O mode, send packet is used to empty the buffer ring this scheme cannot be used. BNDRY must be initialized equal to CURR, or the first executed send packet will not return data from the received packet, which will be written at CURR. The Overwrite Warning bit of the Interrupt Status Register must be used in this mode to differentiate between buffer full and buffer empty.

I/O REMOTE DMA COMMANDS

The Remote DMA channel is used in the I/O Mode to both assemble packets for transmission, and to remove received packets from the Receive Buffer Ring. It may also be used for moving blocks of data or commands between host memory and local buffer memory. (In Shared Memory Mode, the Remote DMA should be disabled, and not used. Packet transfer to/from the system is accomplished by normal CPU read/write operations.)

There are three modes of Remote DMA operation: Remote Write, Remote Read, or Send Packet.

Two register pairs are used to control the Remote DMA, a Remote Start Address (RSAR0, RSAR1) and a Remote Byte Count (RBCRO, RBCR1) register pair. The Start Address Register pair points to the beginning of the block to be moved while the Byte Count Register pair is used to indicate the number of bytes to be transferred. Full handshake logic is provided to move data between local buffer memory and a bi-directional I/O port.

Remote Write: A Remote Write transfer is used to move a block of data from the host into local buffer memory. The Remote DMA will read data from the I/O port and sequentially write it to local buffer memory beginning at the Remote Start Address. The DMA Address will be incremented and the Byte Counter will be decremented after each transfer. The DMA is terminated when the Remote Byte Count Register reaches a count of zero.

Remote Read: A Remote Read transfer is used to move a block of data from local buffer memory to the host. The Remote DMA will sequentially read data from the local buffer memory, beginning at the Remote Start Address, and write data to the I/O port.

Obsolete

6.0 Operation of DP83907 (Continued)

The DMA Address will be incremented and the Byte Counter will be decremented after each transjer. The DMA is terminated when the Remote Byte Count Register reaches zero.

Send Packet Command: The Remote DMA channel can be automatically initialized to transfer a single packet from the Receive Buffer Ring. The CPU begins this transfer by issuing a ''Send Packet'' Command. The DMA will be initialized to the value of the Boundary Pointer Register and the Remote Byte Count Register pair (RBCR0, RBCR1) will be initialized to the value of the Receive Byte Count fields found in the Buffer Header of each packet. After the data is transferred, the Boundary Pointer is advanced to allow the buffers to be used for new receive packets. The Remote Read will terminate when the Byte Count equals zero. The Remote DMA is then prepared to read the next packet from the Receive Buffer Ring. If the DMA pointer crosses the Page Stop Register, it is reset to the Page Start Address. This allows the Remote DMA to remove packets that have wrapped around to the top of the Receive Buffer Ring.

Note 1: In order for the DP83907 Controller to correctly execute the Send Packet Command, the upper Remote Byte Count Register (RBCR1) must first be loaded with 0FH.

Note 2: The Send Packet command cannot be used with 680x0 type processors.

I/O READ TIMING

1) The DMA reads word from local buffer memory and writes the word into the internal latch, increments the DMA address and decrements the byte count (RBCR0,1).
2) Internally a request line is asserted to enable the system to read the port. If the system reads this port before the data has been written, then the system is sent a wait signal to wait until the data has been written to the port. Once written the systems read is allowed to complete.
3) The system reads the port, the read strobe for the port is used as an acknowledge to the Remote DMA and it goes back to step 1.

Steps 1–3 are repeated until the remote DMA is complete. (i.e.. the byte count has gone to zero.)

Note that in order for the Remote DMA to transfer a word from memory to the latch, it must arbitrate access to the local buffer RAM. After each word is transferred to the internal latch, access to the RAM is relinquished. If a Local DMA is in progress, the Remote DMA is held off until the local DMA is complete.

I/O WRITE TIMING

A Remote Write operation transfers data from the I/O port to the local buffer RAM. The system transfers a byte-word to the latch via $\overline{IOWR}$. This write strobe is detected by the DP83907 and the byte/word is transferred to local buffer memory. The Remote DMA holds off further transfers into the latch until the current byte/word has been transferred from the latch.

1) DP83907 awaits data to be written by the system. System writes byte/word into latch.
2) Remote DMA reads contents of port and writes byte/word to local buffer memory, increments address and decrements byte count (RBCR0,1).
3) Go back to step 1.

   Steps 1–3 are repeated until the remote DMA is complete.

6.7 FUNCTIONAL BUS TIMING

This section describes the bus cycles that the DP83907 performs. These timings can be subdivided into 3 basic categories:

1. ISA I/O Access: There are register accesses in both modes, and I/O data accesses in I/O mode.
2. Shared RAM ISA Accesses: These are the timing for the ISA bus accesses through the DP83907 to the memory bus and buffer RAM.
3. Boot PROM ISA Accesses: These are the timing for the ISA bus accesses through the DP83907 to the memory bus and boot PROM.
4. Local and I/O RAM Accesses: This is the timing of the Local DMA, accesses from the NIC Core FIF0 to the RAM, and the Remote DMA accesses to the RAM over the memory bus.

ISA Bus I/O Accesses

The DP83907 is designed to directly interface to the ISA bus (PC AT backplane bus). The CPU can read or write any internal registers. All register accesses are byte wide. The functional timing for DP83907 accesses are shown in the following pages.

Obsolete

6.0 Operation of DP83907 (Continued)

8-Bit I/O Slave Read

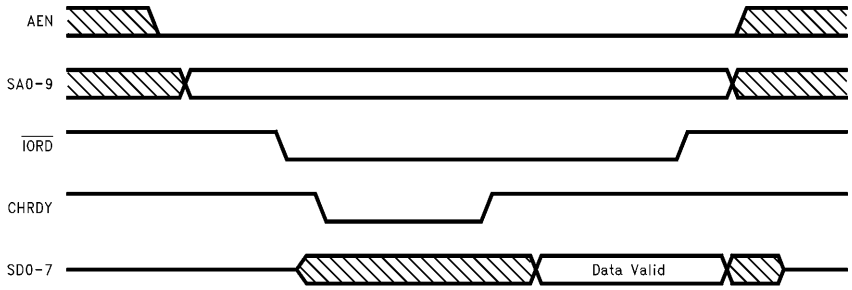

TL/F/12082–36

This is the type of cycle used to read from a register or, in 8-bit mode, from a data transfer port. These accesses are entirely asynchronous, with the DP83907 responding when it decodes the correct address on SA0-9 and an $\overline{\text{IORD}}$. If AEN is high the cycle will be ignored. CHRDY is deasserted if the DP83907 is not ready to respond and asserted when ready. If it is ready immediately CHRDY is not deasserted. The data will always appear on SD0-7.

8-Bit I/O Slave Write

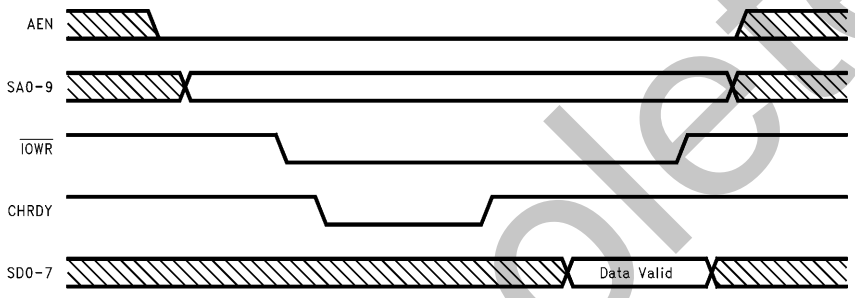

TL/F/12082–37

This is the type of cycle used to write to a register or, in 8-bit mode, to a data transfer port. These accesses are entirely asynchronous, with the DP83907 responding when it decodes the correct address on SA0-9 and an $\overline{\text{IOWR}}$. If AEN is high the cycle will be ignored. CHRDY is deasserted if the DP83907 is not ready to respond and asserted when ready. If it is ready immediately CHRDY is not deasserted. The data will always be taken from SD0-7.

Obsolete

6.0 Operation of DP83907 (Continued)

16-Bit I/O Slave Read

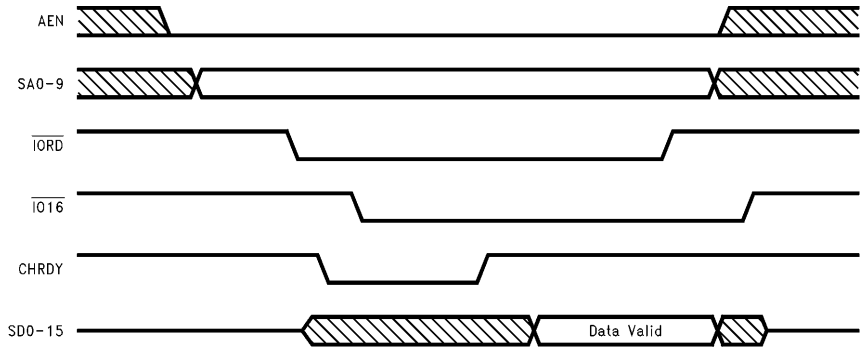

TL/F/12082–38

This is the type of cycle used to read from a data transfer port in 16-bit mode. These accesses are entirely asynchronous, with the DP83907 responding when it decodes the correct address on SA0–9 and an $\overline{\text{IORD}}$. If AEN is high the cycle will be ignored. CHRDY is deasserted if the DP83907 is not ready to respond and asserted when ready. If it is ready immediately CHRDY is not deasserted. $\overline{\text{IO16}}$ is generated, when an address within the DP83907's data transfer port is decoded, to indicate to the system that this is a 16-bit transfer. If the IO16CON bit in Configuration Register B is low then it will be a straight decode of the SA0–9 lines. If that bit is high the $\overline{\text{IO16}}$ output will be generated after $\overline{\text{IORD}}$ goes active, to indicate that this is a 16-bit transfer, and the address should be even, SA0 low. The data will appear on SD0–15.

16-Bit I/O Slave Write

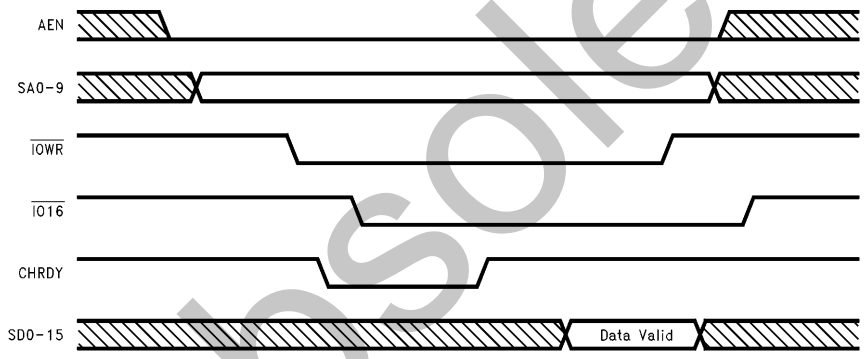

TL/F/12082–39

This is the type of cycle used to write to a data transfer port in 16-bit mode. These accesses are entirely asynchronous, with the DP83907 responding when it decodes the correct address on SA0–9 and an $\overline{\text{IOWR}}$. If AEN is high the cycle will be ignored. CHRDY is deasserted if the DP83907 is not ready to respond and asserted when ready. If it is ready immediately CHRDY is not deasserted. $\overline{\text{IO16}}$ is generated, when an address within the DP83907's data transfer port is decoded, to indicate to the system that this is a 16-bit transfer. If the IO16CON bit in Configuration Register B is low then it will be a straight decode of the SA0–9 lines. If that bit is high the $\overline{\text{IO16}}$ output will be generated after $\overline{\text{IOWR}}$ goes active, to indicate that this is a 16-bit transfer, and the address should be even, SA0 low. The data will be taken from SD0–15.

Obsolete

6.0 Operation of DP83907 (Continued)

16-Bit I/O Cycle with IO16 Fix

Some Chips & Technologies and VLSI Technologies PC-AT chip sets have timing requirements in 16-bit I/O cycles that cannot be achieved by the default DP83907 cycle, described on the previous page. When that cycle is executed with these chip sets, the system does not recognize the CHRDY signal and does not insert wait states. The system executes a standard cycle and deasserts IORD or IOW even if CHRDY is still deasserted. The DP83907 recognizes if this situation has occurred, asserts CHRDY and sets a bus error bit in Configuration Register B to flag this error. Thus the user can test any new system to see if this error occurs and then take some remedial action. The DP83907 supports a fix which can be selected by software, by writing to Configuration Register B.

This fix is enabled by setting the IO16 bit of Configuration Register B. In normal operation any time a valid address exists on SA0-9 IO16 is generated. Delaying IO16 until after the IORD or IOW can cure the problem on non-compliant machines. The theory is that the system is fooled into thinking an 8-bit peripheral is responding, since IO16 is not generated for the valid address, and accepts 8-bit I/O cycle timings for CHRDY. It then rechecks IO16 after the IORD or IOW strobe and correctly determines it is a 16-bit peripheral. If a system did not recheck IO16 it would generate 2, 8-bit cycles instead of 1, 16-bit cycle. The DP83907 would interpret each 8-bit access as a 16-bit transfer and decrement it's DMA byte count by 2. Eventually the system would attempt to access the data transfer port when the DP83907 had finished transferring data and CHRDY would be deasserted indefinitely. To prevent misoperation this fix should only be implemented on systems that require it.

ISA BUS BOOT PROM ACCESS TIMING

Boot PROM Read Bus Timing

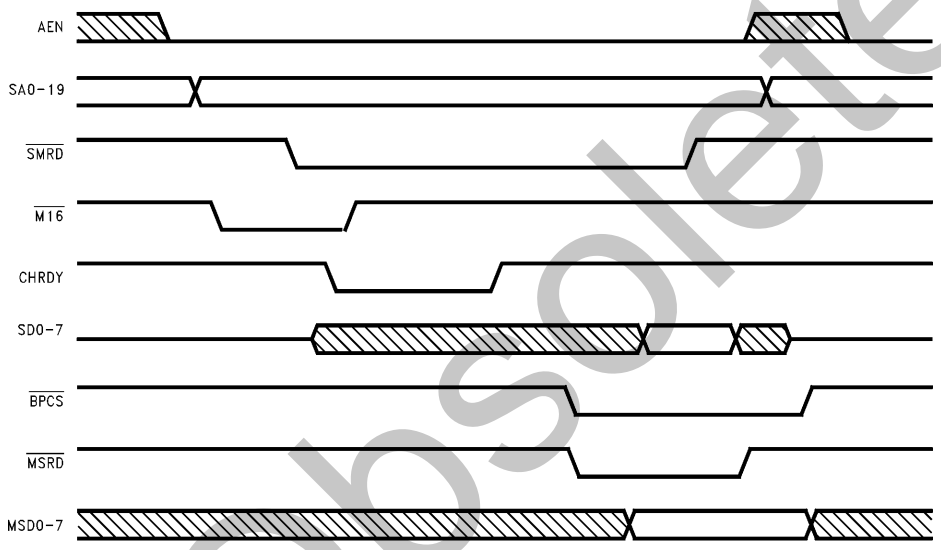

TL/F/12082–40

This is the type of cycle used to read the boot PROM. These accesses are entirely asynchronous, with the DP83907 responding when it decodes the correct address on SA0-19 and a $\overline{SMRD}$. If AEN is high the cycle will be ignored. CHRDY is deasserted if the DP83907 is not ready to respond and asserted when ready. If it is ready immediately CHRDY is not deasserted. The data will be driven from MSD0-7 onto SD0-7.

Obsolete

6.0 Operation of DP83907 (Continued)

Boot PROM Write Bus Timing

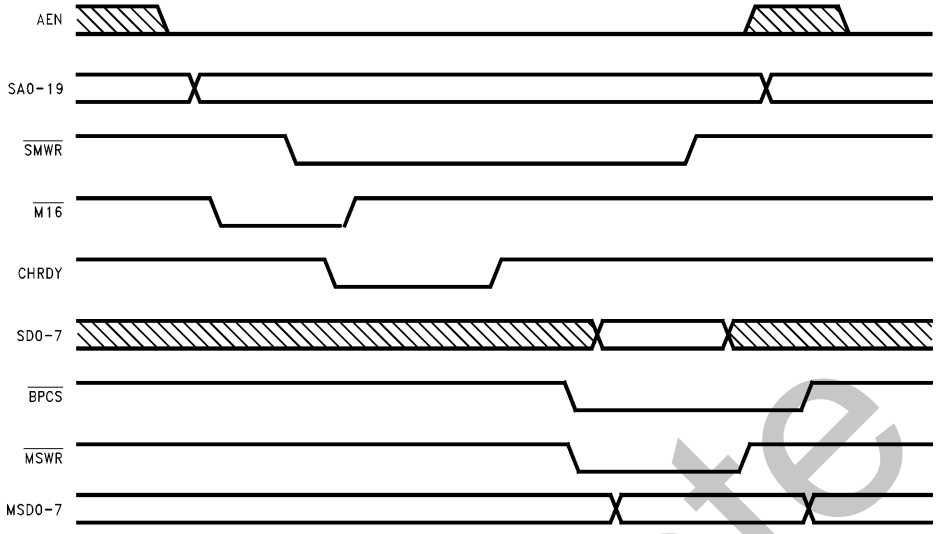

TL/F/12082–41

This is the type of cycle used to write to the boot PROM. These accesses are entirely asynchronous, with the DP83907 responding when it decodes the correct address on SA0-19 and a $\overline{\text{SMWR}}$. If AEN is high the cycle will be ignored. CHRDY is deasserted if the DP83907 is not ready to respond and asserted when ready. If it is ready immediately CHRDY is not deasserted. The data will normally be taken from SD0-7. However, if $\overline{\text{M16}}$ is generated and the access is to an odd address the data will be taken from SD8-15. The data will always be driven onto MSD0-7. The BPWR bit of Configuration Register B must be high to allow write cycles to the boot PROM.

Obsolete

6.0 Operation of DP83907 (Continued)

RAM ACCESS TIMING

Memory Support Read

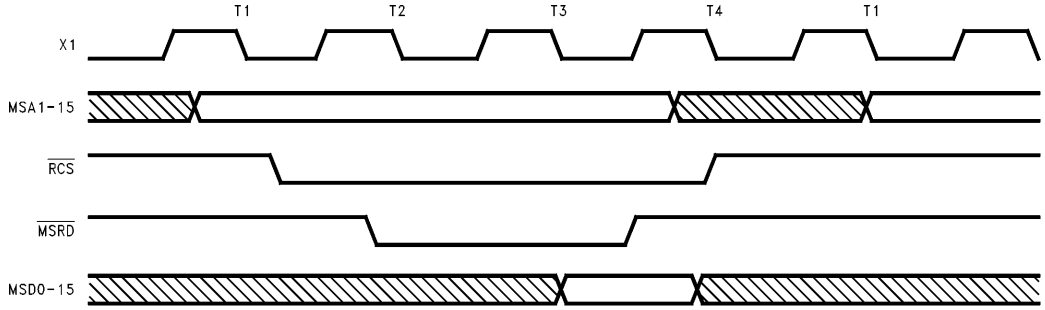

TL/F/12082–42

This is a memory read cycle executed by the DP83907's internal DMA. This is used to either load the data transfer port, during a Remote Read in I/O mode, or to load the FIFO, for a transmission on the network, in both modes. This transfer is synchronized to X1.

Memory Support Write

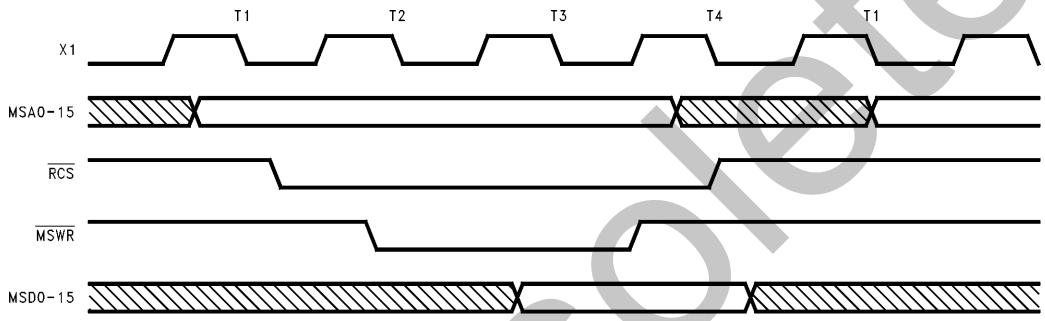

TL/F/12082–43

This is a memory write cycle executed by the DP83907's internal DMA. This is used to either write from the data transfer port, during a Remote Write in I/O mode, or to empty the FIFO, during a reception from the network, in both modes. This transfer is synchronized to X1.

Obsolete

7.0 In-Circuit Test (ICT) Description

The test register is made available only when the test bit (D7 of cnfg. A) is set at the following I/O address:

I/O mode: Base + 1FHex.

The test register contains the following bits. Note that when the test bit is low the test register is held set except for D4 and D0 which is reset.

TABLE I. Test Modes (test pin = 1)

	Test Mode	D7	D6	D5	D4	D3	D2	D1	D0	SA<9>
1	V_{IH}/V_{IL}	1	1	1	1	1	1	1	0	X
2	V_{OH}/V_{OL}	1	1	1	0	1	0	1	0	1

V_{IL}/V_{IH} test mode when high will AND all inputs (except RESET pin) and present outcome on IRQ<3>. To enable this st-nic mode must NOT be entered.

V_{OH}/V_{OL} test mode is active in st-nic mode if SA<9> = 1. Then all o/p's switch with SA<4> as per Table 2.

V_{OH}/V_{OL} mode output states (SA<9> = 1)

TABLE II

Output	SA<4> = 0	SA<4> = 1
MSA<13:1>	1555 Hex	0AAA Hex
MSD<15:0>	AAAA Hex	5555 Hex
SD<15:0>	AAAA Hex	5555 Hex
IRQ<15, 12, 11, 10, 9, 5, 4, 3>	A2 Hex	5D Hex
$\overline{MSWR}$	0	1
$\overline{MSRD}$	1	0
$\overline{RCS}$	0	1
$\overline{BPCS}$	0	1
EECS	1	0
$\overline{IO16}$	0	0
CHRDY (AEN, AORD Must be Low)	0	0
$\overline{GDLNK}$, $\overline{ACT}$, $\overline{COL}$	0, 1, 0	1, 0, 1
THIN	1	0

Obsolete

DP83907 Preliminary Specification Design Guide

This document provides information on National Semiconductor's DP83907 target design parametric specifications. These specifications are provided as design targets for the DP83907. These parameters should be used to undergo systems design activities, and are not provided as guaranteed parametric specifications. At this time these specifications are **not** tested, and are subject to change based upon National's product characterization and yield analysis.

Absolute Maximum Ratings

If Military/Aerospace specified devices are required, please contact the National Semiconductor Sales Office/Distributors for availability and specifications.

Supply Voltage (V_{CC})	−0.5V to +7.0V
Storage Temperature (T_{STG})	−65°C to +150°C
Package Power Dissipation (P_D)	900 mW
Lead Temperature (T_L) (Soldering, 10 seconds)	260°C

Operating Conditions

	Min	Max	Units
Supply Voltage (V_{CC})	4.75	5.25	V
Operating Temperature (T_A)	0	+70	°C
ESD Tolerance: C_{ZAP} = 100 pF, R_{ZAP} = 1.5 kΩ	2.0		kV

Preliminary DC Specifications

Symbol	Description	Conditions	Min	Max	Units
SUPPLY CURRENT					
I_{CC}	Average Active (Transmitting and Receiving) Supply Current	X1 = 20 MHz Clock V_{IN} = Switching		150	mA
I_{CCIDLE}	Average Idle Supply Current	X1 = 20 MHz Clock V_{IN} = V_{CC} or GND		120	mA
TTL INPUTS					
V_{IL}	Maximum Low Level Input Voltage			0.8	V
V_{IH}	Minimum High Level Input Voltage		2.0		V
I_{IN}	Input Current	V_I = V_{CC} or GND	−10	+10	μA
3ST TRI-STATE HIGH DRIVE I/O					
V_{OH}	Minimum High Level Output Voltage	I_{OH} = −3 mA	2.4		V
V_{OL}	Maximum Low Level Output Voltage	I_{OL} = 24 mA		0.5	V
V_{IL}	Maximum Low Level Input Voltage			0.8	V
V_{IH}	Minimum High Level Input Voltage		2.0		V
I_{IN}	Input Current	V_I = V_{CC} or GND	−10	+10	μA
I_{OZ}	Maximum TRI-STATE Output Leakage Current	V_{OUT} = V_{CC} or GND	−10	+10	μA
MOS INPUTS, OUTPUTS AND I/O					
V_{OH}	Minimum High Level Output Voltage	I_{OH} = −20 μA	V_{CC} − 0.1		V
V_{OL}	Maximum Low Level Output Voltage	I_{OL} = 20 μA		0.1	V
V_{IL}	Maximum Low Level Input Voltage			0.8	V
V_{IH}	Minimum High Level Input Voltage		2.0		V
I_{IN}	Input Current	V_I = V_{CC} or GND	−10	+10	μA
I_{IN1}	Input Current MSA9−13, MSD0−2	V_I = V_{CC} or GND	−10	+10	μA
I_{IN2}	Input Current MSD3−15, MSA1−8	V_I = V_{CC} or GND RESET = Active	−10	+10	μA
I_{OZ}	Maximum TRI-STATE Output Leakage Current	V_{OUT} = V_{CC} or GND	−10	+10	μA
OCH OPEN COLLECTOR HIGH DRIVE OUTPUT					
V_{OL}	Maximum Low Level Output Voltage	I_{OL} = 24 mA		0.5	V
LED DRIVER OUTPUT					
V_{OL}	Maximum Low Level Output Voltage	I_{OL} = 16 mA		0.5	V

Obsolete

Preliminary DC Specifications (Continued)

Symbol	Description	Conditions	Min	Max	Units
OSCILLATOR PINS (X1 AND X2)					
V_{IH}	X1 Input High Voltage	X1 is Connected to an Oscillator	2.0		V
V_{IL}	X1 Input Low Voltage	X1 is Connected to an Oscillator		0.8	V
I_{OSC}	X1 Input Current	X1 is Connected to an Oscillator $V_{IN} = V_{CC}$ or GND		1	mA
TPI					
R_{TOL}	TXOd ±, TXO ± Low Level Output Resistance	$I_{OL} = 25$ mA		15	Ω
R_{TOH}	TXOd ±, TXO ± High Level Output Resistance	$I_{OH} = -25$ mA		15	Ω
V_{SRON1}	Receive Threshold Turn-On Voltage 10BASE-T Mode		±300	±585	mV
V_{SRON2}	Receive Threshold Turn-On Voltage Reduced Threshold		±175	±300	mV
V_{SROFF}	Receive Threshold Turn-Off Voltage	(Note 1)	±175	±300	mV
V_{DIFF}	Differential Mode Input Voltage Range	$V_{CC} = 5.0$V (Note 1)	−3.1	+3.1	V
V_{OD}	Differential Output Voltage	On-Chip Filters Selected 100Ω Load	Typical: (Notes 1, 2)	5.0	V pk-pk
AUI					
V_{OD}	Differential Output Voltage (TX ±)	78Ω Termination (Note 1)	±550	±1200	mV
V_{OB}	Differential Idle Output Voltage Imbalance (TX ±)	78Ω Termination (Note 1)	Typical: 40 mV		
V_U	Undershoot Voltage (TX ±)	78Ω Termination (Note 1)	Typical: 80 mV		
V_{DS}	Differential Squelch Threshold (RX ±, CD ±)		−175	−300	mV
V_{CM}	Differential Input Common Mode Voltage (RX ±, CD ±)	(Note 1)	0	5.25	V

Note 1: Not Tested in Production Test.

Note 2: In on-chip filter mode, the value of TPI V_{OD} when measured driving a 100Ω load may not meet the IEEE 802.3 specification over temperature and process without the use of a resistor on RTX. This does not adversely effect system performance. For more details please refer to Applications Note AN-974.

Obsolete

Preliminary Switching Design Guidelines

Memory Support Bus Accesses (for I/O port or FIFO transfers)

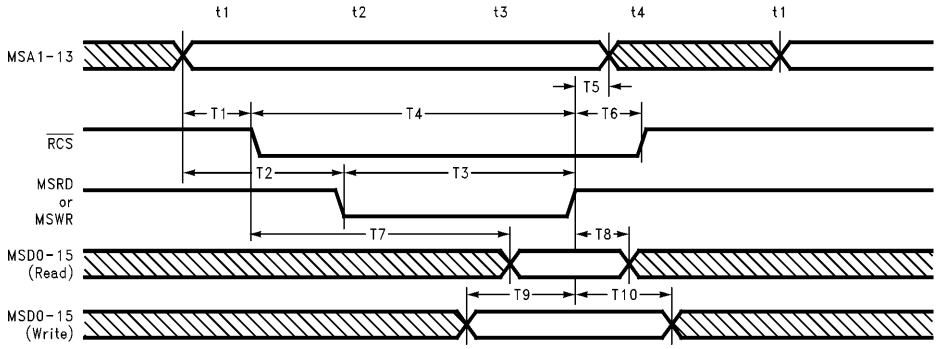

TL/F/12082–44

MEMORY SUPPORY BUS ACCESSES (for I/O Port or FIFO Transfers)

Symbol	Description	8-Bit Transfers		16-Bit Transfers		Units
		Min	Max	Min	Max	
T1	MSA1–13 Valid before $\overline{RCS}$ Asserted		30		30	ns
T2	MSA1–13 Valid before $\overline{MSRD}$–WR Asserted	20		20		ns
T3	$\overline{MSRD}$–WR Width	70		70		ns
T4	$\overline{RCS}$ Valid to $\overline{MSWR}$ or $\overline{MSRD}$ Deasserted	105		105		ns
T5	MSA1–13 Valid after $\overline{MSRD}$–WR Deasserted	10		10		ns
T6	$\overline{RCS}$ Held after $\overline{MSRD}$–WR Deasserted	10		10		ns
T7	$\overline{RCS}$ Active to MSD(0:15) Valid		100		100	ns
T8	Read Data Hold from $\overline{MSRD}$ Deasserted	0		0		ns
T9	Write Data Set-Up to $\overline{MSWR}$ Deasserted	40		40		ns
T10	Write Data Hold from $\overline{MSWR}$ Deasserted	10		10		ns

Obsolete

Preliminary Switching Design Guidelines (Continued)

ISA SLAVE ACCESSES

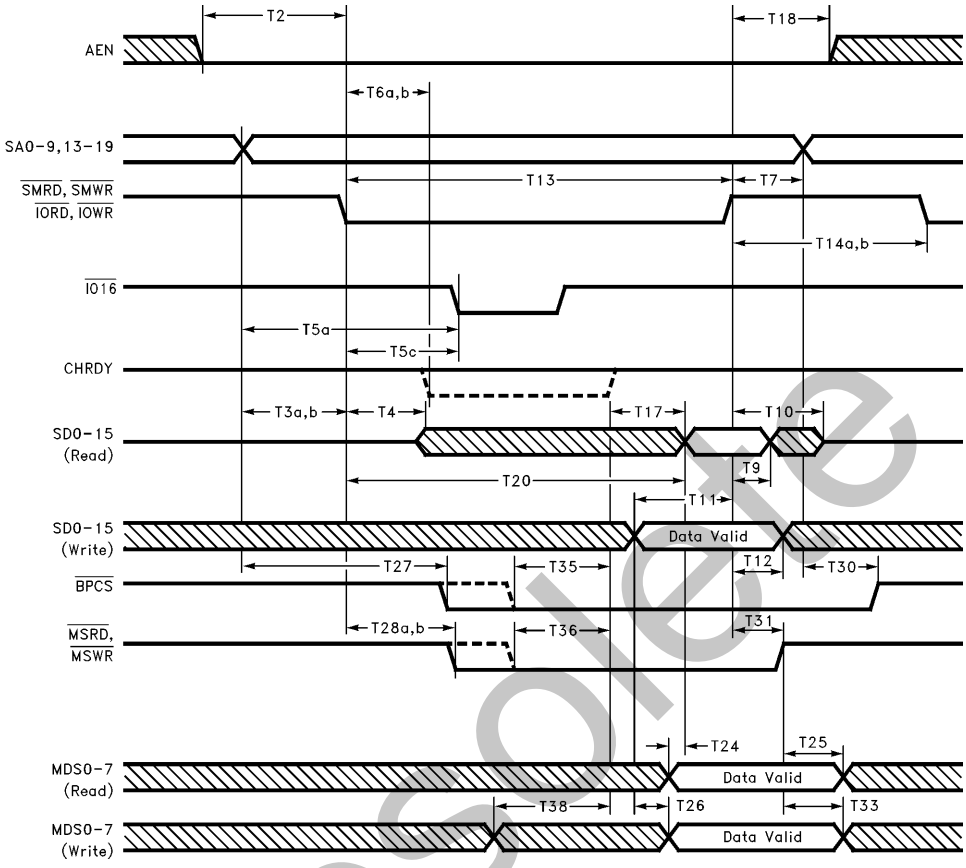

TL/F/12082–45

Obsolete

Preliminary Switching Design Guidelines (Continued)

ISA SLAVE ACCESSES (Continued)

Symbol	Description	8-Bit Transfers		16-Bit Transfers		Units
		Min	Max	Min	Max	
T2	AEN Valid before Command Strobe Active	60		60		ns
T3a	SA0−9 Valid before $\overline{IORD}$, $\overline{IOWR}$ Asserted	40		20		ns
T3b	SA0−19 Valid before $\overline{SMRD}$, $\overline{SMWR}$ Asserted	32				ns
T4	$\overline{SMRD}$, $\overline{IORD}$, Asserted to SD0−15 Driven (Notes 3, 14)	0		0		ns
T5a	SA0−9 Valid before $\overline{IO16}$ Valid (Notes 1, 9)				60	ns
T5c	SA0−9 Valid and $\overline{IORD}$, $\overline{IOWR}$ Active before $\overline{IO16}$ Valid (Notes 1, 10)				50	ns
T6a	$\overline{IORD}$, $\overline{IOWR}$ Asserted to CHRDY Negated (Notes 2, 5)		100		50	ns
T6b	$\overline{SMRD}$, $\overline{SMWR}$ Asserted to CHRDY Negated (Note 2)		100			ns
T7	$\overline{SMRD}$, $\overline{SMWR}$, $\overline{IORD}$, $\overline{IOWR}$, Negated before SA0−9 Invalid	20		20		ns
T9	$\overline{SMRD}$, $\overline{IORD}$, Negated to SD0−15 Read Data Invalid (notes 3, 14)	0		0		ns
T10	$\overline{SMRD}$, $\overline{IORD}$ negated to SD0−15 Floating (Note 3)		45		45	ns
T11	D0−15 Write Data Valid to $\overline{IOWR}$, $\overline{SMWR}$ Negated (Note 3)	60			40	ns
T12	$\overline{SMWR}$, $\overline{IOWR}$, Negated to SD0−15 Write Data Invalid (Note 3)	20		20		ns
T13	$\overline{SMRD}$, $\overline{SMWR}$, $\overline{IORD}$, $\overline{IOWR}$ Active Width (Note 8)	300		140		ns
T14a	$\overline{IORD}$, $\overline{IOWR}$ Inactive Width	85		85		ns
T14b	$\overline{SMRD}$, $\overline{SMWR}$, Inactive Width	150		150		ns
T17	CHRDY Asserted to SD0−15 Read Data Valid (Notes 2, 3, 6)		60		60	ns
T18	$\overline{SMRD}$, $\overline{SMWR}$, $\overline{IORD}$, $\overline{IOWR}$ Negated before AEN Invalid	25		25		ns
T20	$\overline{SMRD}$, $\overline{IORD}$ Asserted to SD0−15 Read Data Valid (Notes 3 and 7)		150		90	ns
T24	Read Data Valid on MSD0−7 to Valid on SD0−7		70			ns
T25	$\overline{MSRD}$ Deasserted to MSD0−7 Read Data Invalid (Note 3)	0				ns
T26	Write Data Valid on SD0−7 to Valid on MSD0−7		90			ns

Obsolete

Preliminary Switching Design Guidelines (Continued)

ISA SLAVE ACCESSES (Continued)

Symbol	Description	8-Bit Transfers		16-Bit Transfers		Units
		Min	Max	Min	Max	
T27	SA0–19 Valid to $\overline{BPCS}$ Asserted (Note 11)		55		55	ns
T28a	$\overline{MRD}$ Asserted to $\overline{MSRD}$ Asserted		60		60	ns
T28b	$\overline{MWR}$ Asserted to $\overline{MSWR}$ Asserted		120		120	ns
T30	SA0–19 Invalid to $\overline{BPCS}$ Negated (Note 11)	0				ns
T31	$\overline{SMRD}$, Deasserted to $\overline{MSRD}$ Deasserted	0				ns
T33	$\overline{MSWR}$ Deasserted to MSD0–7 Invalid (Note 3)	0				ns
T35	$\overline{BPCS}$ Asserted to CHRDY Asserted (Note 13)	175				ns
T36	$\overline{MSRD}$ Asserted to CHRDY Asserted (Note 13)	150				ns
T38	MSD0-7 Asserted to CHRDY Asserted (Note 13)	250				ns

Note 1: $\overline{M16}$, $\overline{IO16}$ are only asserted for 16-bit transfers.

Note 2: CHRDY is only deasserted if the NIC core can not service the access immediately. It is held deasserted until the NIC core is ready, causing the system to insert wait states.

Note 3: On 8-bit transfers only 8 bits of MSD0–15 and D0–7 are driven.

Note 5: This is the standard CHRDY timing where CHRDY is asserted after $\overline{IORD}$ or $\overline{IOWR}$.

Note 6: Read data valid is referenced to CHRDY when wait states have been inserted.

Note 7: If no wait states are inserted read data valid can be measured from $\overline{IORD}$.

Note 8: This is a minimum timing with no additional wait states.

Note 9: This is the standard $\overline{IO16}$ timing where $\overline{IO16}$ is asserted after a valid address decode.

Note 10: This is the late $\overline{IO16}$ timing, required by some machines, where $\overline{IO16}$ is asserted after a valid address decode and $\overline{IORD}$ or $\overline{IOWR}$ going active.

Note 11: This is a timing for a RAM access.

Note 13: This is a timing for a Boot PROM access.

Note 14: Guaranteed by design.

SERIAL EEPROM TIMING

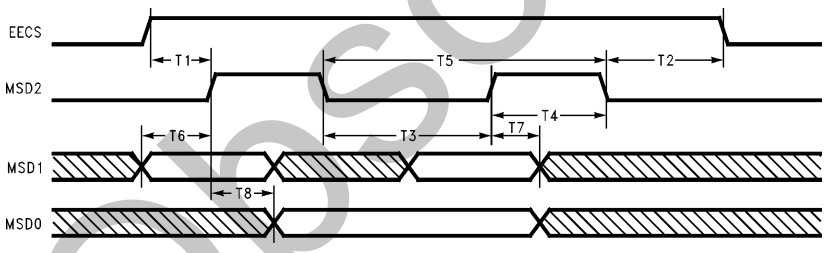

TL/F/12082–46

Symbol	Description	Min	Max	Units
T1	EECS Setup to MSD2	150		ns
T2	EECS Hold after MSD2	250		ns
T3	MSD2 Low Time	450		ns
T4	MSD2 High Time	450		ns
T5	MSD2 Clock Period (Note 1)	1		μs
T6	MSD1 Setup to MSD2 High	100		ns
T7	MSD2 Hold from MSD2 High	100		ns
T8	MSD0 Valid from MSD2 High		500	ns

Note 1: Derived from crystal oscillator tolerance = ± 0.01%.

Obsolete

Preliminary Switching Design Guidelines (Continued)

TPI RECEIVE TIMING (End of Packet)

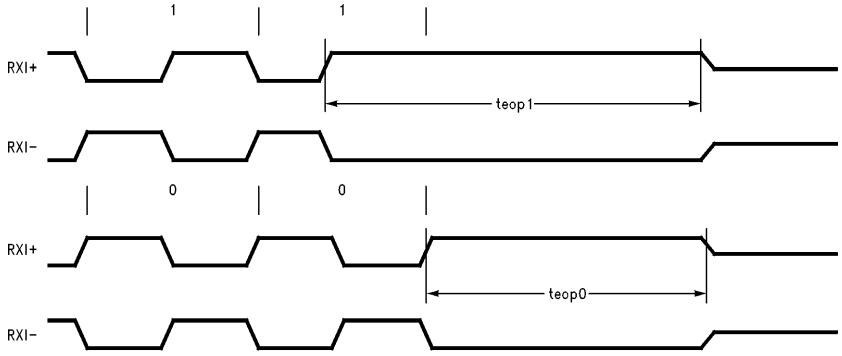

TL/F/12082–47

Symbol	Description	Min	Max	Units
t_{eop1}	Receive End of Packet Hold Time after Logic "1" (Note 1)	225		ns
t_{eop0}	Receive End of Packet Hold Time after Logic "0" (Note 1)	225		ns

Note 1: This parameter guaranteed by design and is not tested.

LINK PULSE TIMING

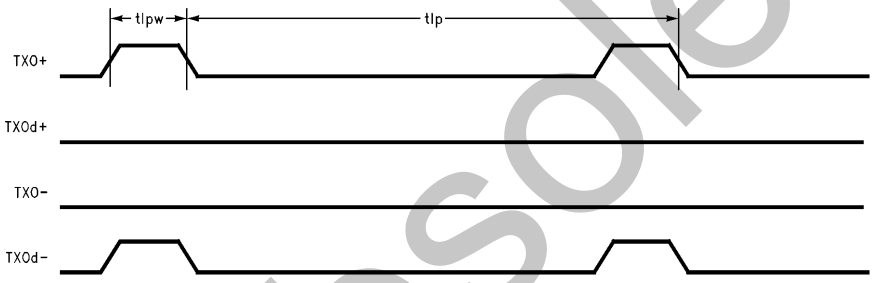

TL/F/12082–48

Symbol	Description	Min	Max	Units
t_{lp}	Time between Link Output Pulses	8	24	ns
t_{lpw}	Link Integrity Output Pulse Width	80	130	ns

Obsolete

Preliminary Switching Design Guidelines (Continued)

TPI TRANSMIT TIMING (End of Packet)

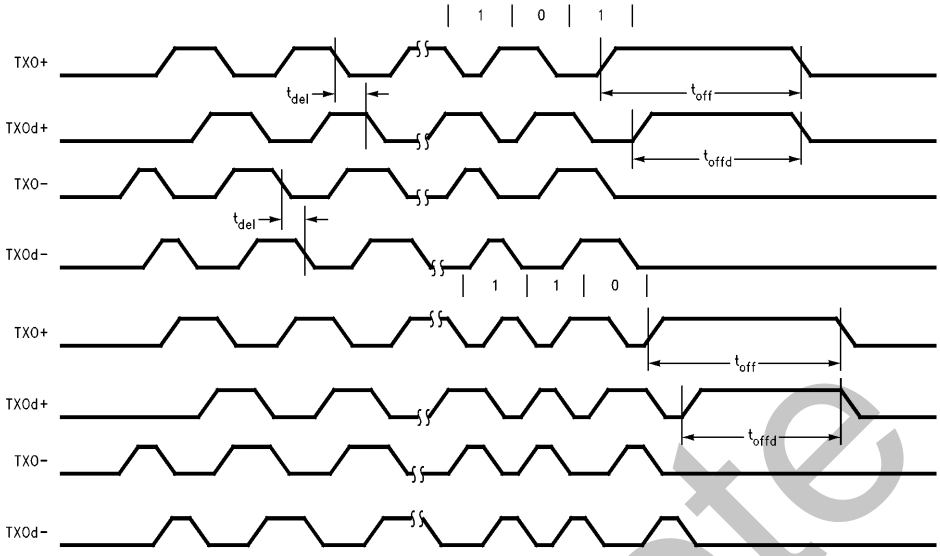

TL/F/12082–49

Symbol	Description	Min	Max	Units
t_{del}	Pre-Emphasis Output Delay (TXO ± to TXOd ±) (Note 1)	46	54	ns
t_{Off}	Transmit Hold Time at End of Packet (TXO ±) (Note 1)	250		ns
t_{Offd}	Transmit Hold Time at End of Packet (TXOd ±) (Note 1)	200		ns

Note 1: This parameter is guaranteed by design and is not tested.

Obsolete

Preliminary Switching Design Guidelines (Continued)

AUI TRANSMIT TIMING (End of Packet)

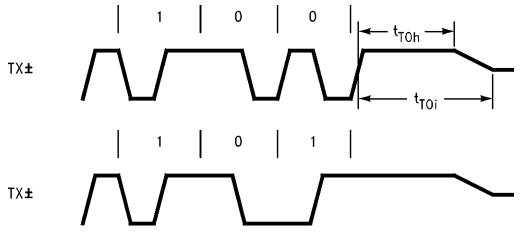

TL/F/12082–50

Symbol	Description	Min	Max	Units
t_{TOh}	Transmit Output High before Idle (Note 1)	200		ns
t_{TOI}	Transmit Output Idle Time (Note 1)	8000		ns

AUI RECEIVE TIMING (End of Packet)

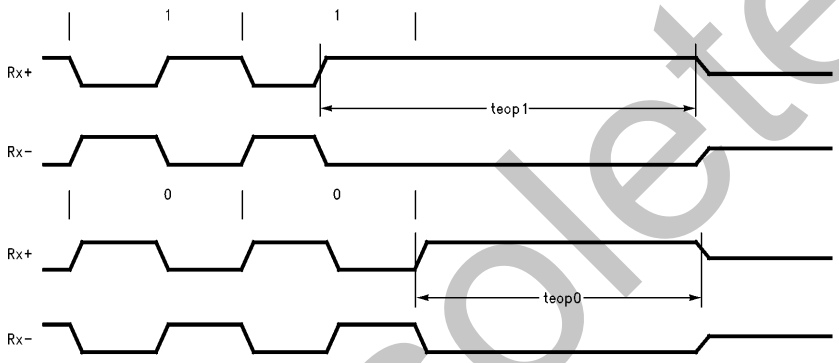

TL/F/12082–51

Symbol	Description	Min	Max	Units
t_{eop1}	Receive End of Packet Hold Time after Logic "1" (Note 1)	225		ns
t_{eop0}	Receive End of Packet Hold Time after Logic "0" (Note 1)	225		ns

Note 1: This parameter is guaranteed by design and is not tested.

Obsolete

Obsolete

Physical Dimensions inches (millimeters)

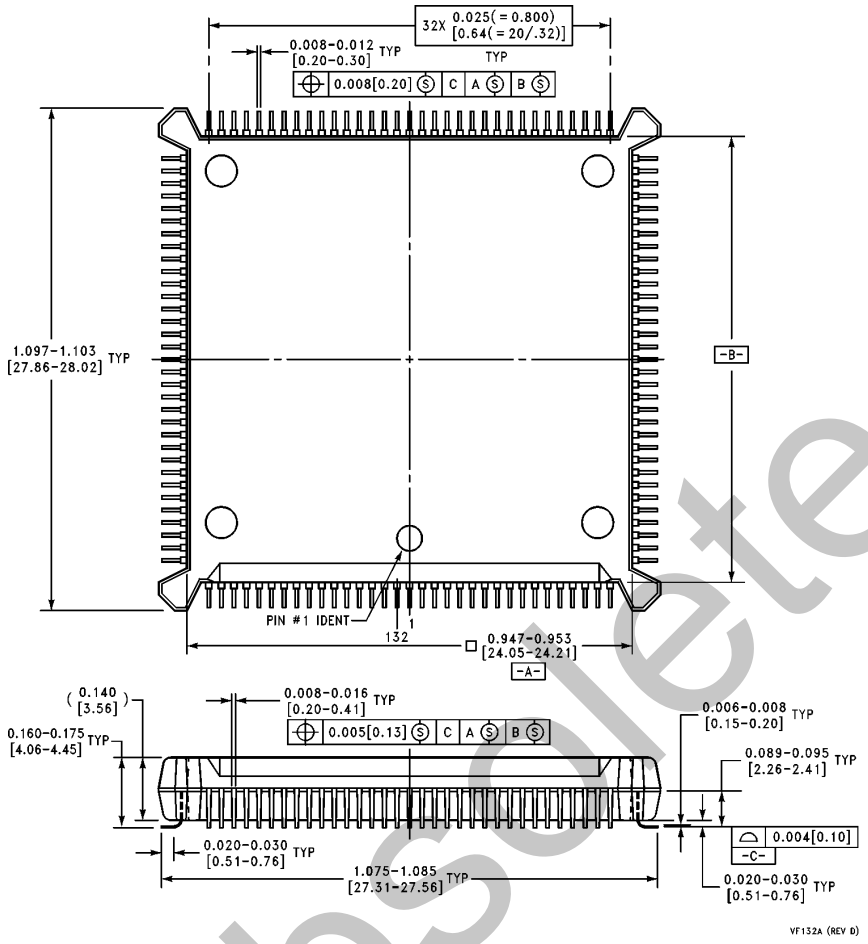

132-Lead Plastic Quad Flatpak PQFP (VF)
Order Number DP83907VF
NS Package Number VF132A

Obsolete

LIFE SUPPORT POLICY

NATIONAL'S PRODUCTS ARE NOT AUTHORIZED FOR USE AS CRITICAL COMPONENTS IN LIFE SUPPORT DEVICES OR SYSTEMS WITHOUT THE EXPRESS WRITTEN APPROVAL OF THE PRESIDENT OF NATIONAL SEMICONDUCTOR CORPORATION. As used herein:

1. Life support devices or systems are devices or systems which, (a) are intended for surgical implant into the body, or (b) support or sustain life, and whose failure to perform, when properly used in accordance with instructions for use provided in the labeling, can be reasonably expected to result in a significant injury to the user.
2. A critical component is any component of a life support device or system whose failure to perform can be reasonably expected to cause the failure of the life support device or system, or to affect its safety or effectiveness.

National Semiconductor Corporation
1111 West Bardin Road
Arlington, TX 76017
Tel: 1(800) 272-9959
Fax: 1(800) 737-7018

National Semiconductor Europe
Fax: (+49) 0-180-530 85 86
Email: cnjwge@tevm2.nsc.com
Deutsch Tel: (+49) 0-180-530 85 85
English Tel: (+49) 0-180-532 78 32
Français Tel: (+49) 0-180-532 93 58
Italiano Tel: (+49) 0-180-534 16 80

National Semiconductor Hong Kong Ltd.
13th Floor, Straight Block,
Ocean Centre, 5 Canton Rd.
Tsimshatsui, Kowloon
Hong Kong
Tel: (852) 2737-1600
Fax: (852) 2736-9960

National Semiconductor Japan Ltd.
Tel: 81-043-299-2309
Fax: 81-043-299-2408

National does not assume any responsibility for use of any circuitry described, no circuit patent licenses are implied and National reserves the right at any time without notice to change said circuitry and specifications.

IMPORTANT NOTICE

Texas Instruments Incorporated and its subsidiaries (TI) reserve the right to make corrections, modifications, enhancements, improvements, and other changes to its products and services at any time and to discontinue any product or service without notice. Customers should obtain the latest relevant information before placing orders and should verify that such information is current and complete. All products are sold subject to TI's terms and conditions of sale supplied at the time of order acknowledgment.

TI warrants performance of its hardware products to the specifications applicable at the time of sale in accordance with TI's standard warranty. Testing and other quality control techniques are used to the extent TI deems necessary to support this warranty. Except where mandated by government requirements, testing of all parameters of each product is not necessarily performed.

TI assumes no liability for applications assistance or customer product design. Customers are responsible for their products and applications using TI components. To minimize the risks associated with customer products and applications, customers should provide adequate design and operating safeguards.

TI does not warrant or represent that any license, either express or implied, is granted under any TI patent right, copyright, mask work right, or other TI intellectual property right relating to any combination, machine, or process in which TI products or services are used. Information published by TI regarding third-party products or services does not constitute a license from TI to use such products or services or a warranty or endorsement thereof. Use of such information may require a license from a third party under the patents or other intellectual property of the third party, or a license from TI under the patents or other intellectual property of TI.

Reproduction of TI information in TI data books or data sheets is permissible only if reproduction is without alteration and is accompanied by all associated warranties, conditions, limitations, and notices. Reproduction of this information with alteration is an unfair and deceptive business practice. TI is not responsible or liable for such altered documentation. Information of third parties may be subject to additional restrictions.

Resale of TI products or services with statements different from or beyond the parameters stated by TI for that product or service voids all express and any implied warranties for the associated TI product or service and is an unfair and deceptive business practice. TI is not responsible or liable for any such statements.

TI products are not authorized for use in safety-critical applications (such as life support) where a failure of the TI product would reasonably be expected to cause severe personal injury or death, unless officers of the parties have executed an agreement specifically governing such use. Buyers represent that they have all necessary expertise in the safety and regulatory ramifications of their applications, and acknowledge and agree that they are solely responsible for all legal, regulatory and safety-related requirements concerning their products and any use of TI products in such safety-critical applications, notwithstanding any applications-related information or support that may be provided by TI. Further, Buyers must fully indemnify TI and its representatives against any damages arising out of the use of TI products in such safety-critical applications.

TI products are neither designed nor intended for use in military/aerospace applications or environments unless the TI products are specifically designated by TI as military-grade or "enhanced plastic." Only products designated by TI as military-grade meet military specifications. Buyers acknowledge and agree that any such use of TI products which TI has not designated as military-grade is solely at the Buyer's risk, and that they are solely responsible for compliance with all legal and regulatory requirements in connection with such use.

TI products are neither designed nor intended for use in automotive applications or environments unless the specific TI products are designated by TI as compliant with ISO/TS 16949 requirements. Buyers acknowledge and agree that, if they use any non-designated products in automotive applications, TI will not be responsible for any failure to meet such requirements.

Following are URLs where you can obtain information on other Texas Instruments products and application solutions:

Products		**Applications**	
Audio	www.ti.com/audio	Communications and Telecom	www.ti.com/communications
Amplifiers	amplifier.ti.com	Computers and Peripherals	www.ti.com/computers
Data Converters	dataconverter.ti.com	Consumer Electronics	www.ti.com/consumer-apps
DLP® Products	www.dlp.com	Energy and Lighting	www.ti.com/energy
DSP	dsp.ti.com	Industrial	www.ti.com/industrial
Clocks and Timers	www.ti.com/clocks	Medical	www.ti.com/medical
Interface	interface.ti.com	Security	www.ti.com/security
Logic	logic.ti.com	Space, Avionics and Defense	www.ti.com/space-avionics-defense
Power Mgmt	power.ti.com	Transportation and Automotive	www.ti.com/automotive
Microcontrollers	microcontroller.ti.com	Video and Imaging	www.ti.com/video
RFID	www.ti-rfid.com		
OMAP Mobile Processors	www.ti.com/omap		
Wireless Connectivity	www.ti.com/wirelessconnectivity		

TI E2E Community Home Page e2e.ti.com

Mailing Address: Texas Instruments, Post Office Box 655303, Dallas, Texas 75265
Copyright © 2011, Texas Instruments Incorporated